STARBUCKS SHELL

TUSKAWILLA

NEW COMMERCIAL CONSTRUCTION

Permit Submittal Set

Project Address:
3645 Aloma Ave.
Oviedo, FL 32765

CODE REVIEW

PROJECT NARRATIVE

THIS WORK IS FOR A TENANT FIT-OUT OF A NEW COMMERCIAL SPACE OF APPROXIMATELY 2,700 GSF. THE PROPOSED USE IS ASSEMBLY (A-2) OCCUPANCY, WHICH IS CONSISTENT WITH THE ZONING OF THE PROPERTY. THE SCOPE OF WORK IS FOR THE BUILDING SHELL AND DOES NOT INCLUDE TENANT BUILD-OUT OR FUTURE OCCUPANCY, WHICH WILL BE SUBMITTED UNDER A SEPARATE PERMIT.

THE PROPOSED OF WORK INCLUDES, BUT IS NOT LIMITED TO, CMU CONSTRUCTION, CONCRETE SLAB-ON-GRADE, INTERIOR METAL FRAMED NON-BEARING PARTITIONS, EXTERIOR FINISHES, ELECTRICAL FIXTURES AND DISTRIBUTION FROM ELECTRICAL PANELS, AND MECHANICAL AND PLUMBING SYSTEMS.

REFERENCED CODES

FLORIDA BUILDING CODE (FBC) - 7TH EDITION (2020)
FLORIDA PLUMBING CODE - 7TH EDITION (2020)
FLORIDA FUEL GAS CODE - 7TH EDITION (2020)
FLORIDA MECHANICAL CODE - 7TH EDITION (2020)
FLORIDA ACCESSIBILITY CODE - 7TH EDITION (2020)
FLORIDA ENERGY CONSERVATION CODE - 7TH EDITION (2020)
FLORIDA FIRE PREVENTION CODE - 7TH EDITION (2020)
NATIONAL FIRE PROTECTION ASSOCIATION - NFPA 1 FIRE CODE - 2018
NATIONAL FIRE PROTECTION ASSOCIATION - NFPA 101 LIFE SAFETY CODE - 2018
NATIONAL ELECTRIC CODE - 2017

CODE ANALYSIS

PARCEL ID: 36-21-30-513-0000-0010

ZONING CLASSIFICATION
PD PLANNED DEVELOPMENT

OCCUPANCY CLASSIFICATION
ASSEMBLY GROUP A-2 (F.B.C 303.3)

BUILDING FOOTAGE: 2,700 SF

CONSTRUCTION TYPE
TYPE II-B UNSPRINKLED

OCCUPANCY LOAD (PLEASE SEE SHEET A003 FOR CALCULATIONS) 1

PER FBC 83 OCCUPANTS
PER NFPA 88 OCCUPANTS

MINIMUM EGRESS WIDTH (PER FBC SECTION 1005)
REQUIRED EGRESS WIDTH = 83 PEOPLE X 0.2 = 16.6"
PROVIDED EGRESS WIDTH = 142"

MINIMUM EXITS REQUIRED (PER FBC SECTION 1006.3.2)
OCCUPANT LOAD PER STORY: 1-500
REQUIRED: 2 PROVIDED: 3

MAXIMUM TRAVEL DISTANCE (PER FBC TABLE 1017.2)
EXIT ACCESS TRAVEL DISTANCE SHALL NOT EXCEED 200'
NO TRAVEL DISTANCE EXCEEDS THIS DISTANCE.

ALL WALL, FLOOR AND CEILING FINISHES SHALL COMPLY WITH NFPA 101 SECTION 10.2.

REQUIRED FIRE-RESISTANCE FOR BUILDING ELEMENTS (FBC TABLE 601)
STRUCTURAL FRAME - 0 HOURS
BEARING WALLS (INTERIOR) - 0 HOURS
BEARING WALLS (EXTERIOR) - 0 HOURS
NONBEARING WALLS (INTERIOR) - 0 HOURS
NONBEARING WALLS (EXTERIOR) - 0 HOURS
FLOOR CONSTRUCTION - 0 HOURS
ROOF CONSTRUCTION - 0 HOURS

ARCHITECT'S STATEMENT OF FACT
BY SIGNING AND SEALING THIS DRAWING, THE ARCHITECT ACKNOWLEDGES THAT TO THE BEST OF HIS/HER KNOWLEDGE, THESE DRAWINGS AND THE PROPOSED WORK COMPLY WITH THE MINIMUM APPLICABLE BUILDING CODES AND FIRE SAFETY REGULATIONS AS DETERMINED BY THE LOCAL AUTHORITY HAVING JURISDICTION.

SYMBOLS LEGEND

WINDOW TYPE	0
DOOR TYPE	0
CENTER LINE	CL
COLUMN LINE	0-0
ELEVATION / HEIGHT	+0'-0" T/ SLAB
WALL / PARTITION	0
AREA IDENTIFICATION	ROOM NAME 123 456 SF
NORTH ARROW	NORTH
REVISION CLOUD	2
EXTERIOR ELEVATION	DRAWING ID, 0, X-000, SHEET ID
SECTION CUT	DRAWING ID, 0, X-000, SHEET ID
SECTION DETAIL CUT	DRAWING ID, 0, X-000, SHEET ID
ENLARGED DETAIL	DRAWING ID, 0, X-000, SHEET ID
INTERIOR ELEVATION	DRAWING ID, 0, X0-0, SHEET ID
NOTES	0, 000

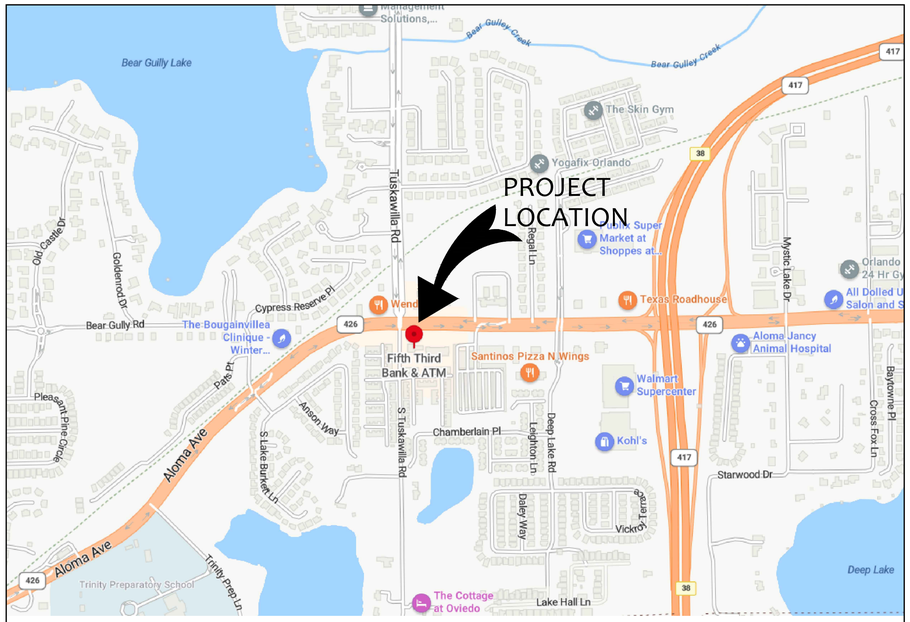

01 LOCATION MAP
NOT TO SCALE

NORTH

GENERAL NOTES

1. THE ATTACHED DRAWING PACKAGE HAS BEEN TRANSMITTED AS A SINGLE DOCUMENT CONSISTING OF MULTIPLE, INTERRELATED COMPONENTS AND, IN SOME CASE, DISCIPLINES. ANY SEPARATION AND/OR BREAKING APART OF ANY INDIVIDUAL COMPONENTS AND/OR DISCIPLINES OF THIS SINGLE DOCUMENT BY THE OWNER, GENERAL CONTRACTOR, AND/OR SUBCONTRACTOR FOR THE PURPOSES SUCH AS, BUT NOT LIMITED TO BIDDING, ESTIMATING, PERMITTING, ETC. IN NO WAY RELIEVES THE RECIPIENT OF THE ORIGINAL SINGLE DOCUMENT FROM BEING RESPONSIBLE FOR ALL INFORMATION CONTAINED WITHIN THE ORIGINAL SINGLE DOCUMENT IN SUCH ACTIVITIES. RECEIPT OF THESE DOCUMENTS CONSTITUTES ACCEPTANCE OF THESE TERMS AND CONDITION BY THE RECIPIENT.
2. CONTRACTOR SHALL BE RESPONSIBLE FOR ISSUING COMPLETE SETS OF THE CONTRACT DOCUMENTS AND DESCRIPTION OF THE SCOPE OF WORK TO EACH OF THE SUBCONTRACTORS, PERSONS, OR ENTITIES FOR BIDDING, COORDINATION AND EXECUTION OF THEIR WORK.
3. ALL REFERENCES TO THE TERM 'CONTRACTOR' INCLUDE THE GENERAL CONTRACTOR AND SUBCONTRACTORS
4. CONTRACTOR SHALL OBTAIN AND PAY FOR ALL PERMITS, FEES, INSPECTIONS AND APPROVALS BY LOCAL AUTHORITIES HAVING JURISDICTION OVER THE PROJECT. PROVIDE COPIES OF ALL TRANSACTIONS TO OWNER. CONTRACTOR SHALL BE RESPONSIBLE FOR COMPLIANCE WITH ORDERS OF ANY PUBLIC AUTHORITY BEARING ON THE PERFORMANCE OF THIS WORK.
5. CONTRACTOR SHALL BE SOLELY RESPONSIBLE FOR, AND HAVE CONTROL OVER ALL CONSTRUCTION MEANS, TECHNIQUES, PROCEDURES AND COORDINATION OF ALL PORTIONS OF THE WORK REQUIRED BY THE CONTRACT DOCUMENTS.
6. CONTRACTOR SHALL FULLY FAMILIARIZE HIMSELF WITH THE CONDITIONS OF THE CONTRACT, LOCAL CONDITIONS RELATING TO LOCATION, ACCESSIBILITY, AND GENERAL CHARACTER OF THE CONSTRUCTION SITE AND LOCAL LABOR CONDITIONS SO THAT HE/SHE UNDERSTANDS THE NATURE, EXTENT, DIFFICULTIES AND RESTRICTIONS RELATED TO THE EXECUTION OF THIS WORK.
7. G.C. IS RESPONSIBLE FOR CONNECTING UTILITY LINES TO THE BUILDING (REF. M/E/P/FP DRAWINGS).
8. ALL CONSTRUCTION SHALL COMPLY WITH ALL APPLICABLE BUILDING CODES AND LOCAL RESTRICTIONS. CONTRACTOR SHALL BE RESPONSIBLE FOR COMPLIANCE WITH ORDERS OF ANY PUBLIC AUTHORITY BEARING ON THE PERFORMANCE OF THE WORK.
9. NEITHER THE ARCHITECT OR ANY OF THEIR CONSULTANTS HAVE EVALUATED THE SITE FOR EXISTING SOIL CONTAMINATION, HAZARDOUS MATERIAL OR TOXIC WASTE. THEREFORE THE ARCHITECT OR THEIR CONSULTANTS SHALL NOT BE HELD RESPONSIBLE FOR EXISTING CONTAMINATED, HAZARDOUS OR TOXIC CONDITIONS DISCOVERED AT THE SITE.
10. IT SHALL BE THE RESPONSIBILITY OF THE CONTRACTOR TO LOCATE ALL EXISTING UTILITIES AND SERVICES, WHETHER SHOWN HEREIN OR NOT AND TO PROTECT THEM FROM DAMAGE THROUGHOUT THE COURSE OF THIS WORK. CONTRACTOR SHALL BEAR ALL EXPENSES OF REPAIR OR REPLACEMENT OF UTILITIES, SERVICES, OR OTHER PROPERTY DAMAGED BY OPERATIONS IN CONJUNCTION WITH THE PERFORMANCE OF THIS WORK.
11. THESE DOCUMENTS HAVE BEEN PREPARED BASED ON INFORMATION PROVIDED TO THE ARCHITECT BY OTHERS. THEREFORE THE ARCHITECT SHALL NOT BE HELD RESPONSIBLE FOR ERRORS, OMISSIONS, CONFLICTS, DEFICIENCIES OR INACCURACIES ARISING FROM DISCOVERY OF CONCEALED, UNKNOWN OR DIFFERING CONDITIONS AS A RESULT OF THIS CIRCUMSTANCE. CONTRACTOR SHOULD FULLY ACQUAINT HIMSELF WITH THE SITE AND FIELD VERIFY ALL CONDITIONS AND DIMENSIONS PRIOR TO PERFORMING ANY WORK.
12. CONTRACTOR SHALL REPORT TO THE ARCHITECT ANY ERRORS, INCONSISTENCIES OR OMISSIONS HE MAY DISCOVER PRIOR TO PURCHASING, INSTALLATION AND/OR CONSTRUCTION. CONTRACTOR SHALL BE RESPONSIBLE FOR CORRECTING ANY ERRORS AT NO ADDITIONAL COST TO THE ARCHITECT OR OWNER ONCE WORK HAS COMMENCED. THE MEANS OF CORRECTING THESE ISSUES SHALL BE APPROVED BY THE OWNER.
13. EXISTING CONDITIONS NOT A PART OF THIS PERMIT ARE INDICATED IN THE DRAWINGS AS A SCREENED OR HALF-TONED IMAGE.
14. DO NOT SCALE DRAWINGS. IF A DIMENSION IS UNCLEAR OR NOT MARKED ON DRAWINGS, CONTACT THE ARCHITECT.
15. ALL DIMENSIONS FOR THE CONSTRUCTION INDICATED ARE TO THE CENTERLINE OR THE FACE OF THE STUDS (ROUGH), DEPENDENT ON THE LOCATION OF THE DIMENSION LINE. DIMENSIONS WHICH ARE TO FINISHED SURFACE ARE NOTED AS SUCH, EXCEPT AT EXISTING SURFACES. ALL ANGLES OF PLAN ARE MULTIPLES OF 45° UNLESS NOTED OTHERWISE.
16. G.C. IS RESPONSIBLE FOR PROVIDING AND INSTALLING SITE LIGHTING, SIGNAGE LIGHTING, AND EXTERIOR BUILDING LIGHTING. (SEE SITE, CIVIL, AND ELECTRICAL DRAWINGS)
17. IF REQUIRED, CONTRACTOR SHALL CONTRACT WITH A SPECIALTY ENGINEER LICENSED IN THE STATE OF FLORIDA FOR DESIGNING AN AUTOMATIC SPRINKLER SYSTEM COMPLYING WITH ALL APPLICABLE CODES. G.C. SHALL SUBMIT SPRINKLER DESIGN AND LAYOUT TO OWNER AND ARCHITECT FOR REVIEW PRIOR TO PURCHASE, INSTALLATION AND/OR CONSTRUCTION.
18. ALL EXTERIOR ELEMENTS, ASSEMBLIES, GLAZING, GLAZING SYSTEMS AND COMPONENTS INCLUDING CLADDING AND CONNECTIONS USED ON THIS WORK, SHALL MEET THE DESIGN WIND PRESSURES SPECIFIED IN COMPLIANCE WITH FBC 1609.1.2. CONTRACTOR SHALL PROVIDE WINDOW AND DOOR MANUFACTURERS TEST REPORTS AND INSTALLATION DETAILS AS PART OF PERMIT SUBMITTAL DOCUMENTATION. SUBMIT SHOP DWGS. OF ALL DOORS AND HARDWARE TO ARCHITECT FOR REVIEW.
19. G.C. SHALL KEEP A COPY OF THE SOILS REPORT ON SITE. ALL CONSTRUCTION WORK SHALL COMPLY WITH ITS RECOMMENDATIONS / REQUIREMENTS.
20. THE LANDLORD WORK LETTERS DATED X-X-X, (INCLUDED HEREIN, REF. SHEETS A004-005-006) ARE CONSIDERED PART OF THIS WORK. IT IS THE RESPONSIBILITY OF THE CONTRACTOR TO FAMILIARIZE HIM/HERSELF WITH THE REQUIREMENTS OUTLINED THEREIN. PRIOR TO BEGINNING WORK, NOTIFY ARCHITECT OF ANY CONFLICTS BETWEEN THESE DOCUMENTS.

ABBREVIATIONS

AFF	ABOVE FINISH FLOOR	DIM	DIMENSION	GALV	GALVANIZED	NIC	NOT IN CONTRACT	STL	STEEL
ACT	ACOUSTICAL CEILING TILE	DN	DOWN	GA	GAUGE	NTS	NOT TO SCALE	STRUCT	STRUCTURAL
ATWA	ALL THE WAY AROUND	DS	DOWNSPOUT	GC	GENERAL CONTRACTOR	OC	ON CENTER	TEMP	TEMPORARY
ALUM	ALUMINUM	DWG	DRAWING	GWB	GYPSUM WALL BOARD	OPP	OPPOSITE	TWOS	THROUGH WALL OVERFLOW SCUPPER
APPRX	APPROXIMATE	DF	DRINKING FOUNTAIN	HM	HOLLOW METAL	O-T-O	OUTSIDE-TO-OUTSIDE (OUTSIDE DIMENSION)	T&G	TONGUE AND GROOVE
ARCH	ARCHITECTURAL	EA	EACH	HORZ	HORIZONTAL	P	PAINT	T/	TOP OF
BRG	BEARING	EWC	ELECTRICAL WATER COOLER	INSUL	INSULATION	P-LAM	PLASTIC LAMINATE	TS	TUBE STEEL
B/	BOTTOM OF	ELEC	ELECTRICAL	INT	INTERIOR	PLYWD	PLYWOOD	TYP	TYPICAL
BLDG	BUILDING	ELEV	ELEVATION	I-T-I	INSIDE-TO-INSIDE (INSIDE DIMENSION)	PAF	POWER ACTUATED FASTENER	UNO	UNLESS NOTED OTHERWISE
CLNG	CEILING	EQ	EQUAL	LAM	LAMINATED	PT	PRESSURE TREATED	VERT	VERTICAL
CL	CENTER LINE	EQUIP	EQUIPMENT	LAV	LAVATORY	R	RADIUS	VCT	VINYL COMPOSITION TILE
CT	CERAMIC TILE	ETR	EXISTING TO REMAIN	MNFCT'R	MANUFACTURER	REINF	REINFORCED (REINFORCING)	VIF	VERIFY IN FIELD
CO	CLEAN-OUT	EJ	EXPANSION JOINT	MAX	MAXIMUM	REQ'D	REQUIRED	WC	WATER CLOSET
CLR	CLEAR	EXT	EXTERIOR	MECH	MECHANICAL	RTU	ROOF TOP UNIT	WH	WATER HEATER
COL	COLUMN	FIN	FINISH	MTL	METAL	RO	ROUGH OPENING	WP	WATERPROOF
CONC	CONCRETE	FE	FIRE EXTINGUISHER	MIN	MINIMUM	SIM	SIMILAR	WR	WATER RESISTANT
CMU	CONCRETE MASONRY UNIT(S)	FRT	FIRE RETARDANT TREATED	MISC	MISCELLANEOUS	SPEC	SPECIFICATION	WWF	WELDED WIRE FABRIC
CONT	CONTINUOUS	FD	FLOOR DRAIN	MTG	MOUNTING	SQ	SQUARE	WWM	WELDED WIRE MESH
CJ	CONTROL JOINT	FT	FEET	NOM	NOMINAL	SS	STAINLESS STEEL	W/	WITH
DIA	DIAMETER	FTG	FOOTING	N/A	NOT APPLICABLE	STD	STANDARD	W/O	WITHOUT

OWNER
HILL GRAY SEVEN
1350 City View Center
Oviedo, FL 32765

Contact Person:
Drew Hill
drew@hillgrayseven.com
OFFICE: (407) 588 6514
FAX: (407) 588 2152

ARCHITECT
ELEVEN18 Architecture
1011 E. Colonial Drive, Suite 307
Orlando, FL 32801

Contact Person:
Kim McCann
kmccann@eleven18architecture.com
www.eleven18architecture.com
OFFICE: (407) 745-5300

M/E/P/FP
Construction Engineering Group
2651 W. Eau Gallie Blvd, Suite A
Melbourne, FL 32935

Contact Person:
Dave Alley
dalley@cegengineering.com
www.cegengineering.com
OFFICE: (321) 253-1221

CONTRACTOR
TBD

STRUCTURAL
Gutherman Structural Inc.
130 Crown Oak Centre Drive
Longwood, FL 32750

Contact Person:
Jack Gutherman
jgutherman@gstructural.com
DIRECT: (407) 701-0875

CIVIL
Z Development Services
708 E. Colonial Drive, Suite 100
Orlando, FL 32803

Contact Person:
Rick Krietemeyer
rick@zdevelopmentservices.com
OFFICE: (407) 629-8330
MOBILE: (407) 937-9815

TABLE OF CONTENTS

ARCHITECTURAL

		P	1	2	3
A000	Cover Sheet & Code Review	●	●		
A001	General Conditions	●			
A002	Site Plan	●	●		
A003	Life Safety and Occupant Load	●	●		
A004	Landlord Work Letter	●			
A005	Landlord Work Letter	●			
A006	Landlord Work Letter	●			
A201	Floor Plan	●			
A221	Roof Plan	●	●		
A301	Exterior Elevations	●			
A401	Overall Building Sections	●	●		
A511	Wall Sections	●			
A601	STO Details	●			
A602	Wall & Roof Details	●			
A701	Door & Glazing Schedules	●			
A801	Dumpster Enclosure	●			

STRUCTURAL

		P	1	2	3
S-0	General Notes & Schedules	●			
S-1	Foundation Plan	●			
S-2	Roof Framing Plan	●			
S-3	Typical Details	●			
S-4	Foundation & Framing Details	●			
S-5	Foundation & Framing Details	●			
S-6	Foundation & Framing Details	●			
S-7	Dumpster Enclosure	●			

M/E/P/FP

		P	1	2	3
E1	Electrical Notes and Symbols	●	●		
E2	Site Electrical Plan	●	●		
E3	Site Electrical Detail	●			
E4	Lighting Plan	●	●		
E5	Power and Systems Plan	●			
E6	Riser Diagram and Schedules	●			
M1	Mechanical Plan Specs, Sched. & Det.	●	●		
M2	Mechanical Plan	●			
M3	Mechanical Plan Roof	●			
P1	Plumbing Specs, Sched. & Details	●	●		
P2	Plumbing Plan	●			

COPYRIGHT STATEMENT
These documents, their contents, and the ideas, designs, and concepts presented here-in are the property of ELEVEN18 Architecture and are issued only for the specific project noted on these documents. Holders of these documents that have established a mutually agreed contractual relationship with ELEVEN18 Architecture have been granted a limited license to reproduce these documents in relationship to the specific project referenced. All others are subject to US Copyright Law as defined by Title 17 of the United States Code and other regional laws as may apply. Any revisions, reproductions, modifications, or re-use of these documents without the express written consent of ELEVEN18 Architecture is prohibited by Law.

10 JUL 2023

STATE OF FLORIDA
MATTHEW A. CONTE
AR96819
REGISTERED ARCHITECT

Matt Conte, AIA
FL. REG.#AR96819

ELEVEN 18 ARCHITECTURE
A WOMEN'S BUSINESS ENTERPRISE
FL License: AA26008884

Mailing Address:
424 E. Central Blvd. #542
Orlando, FL 32801
www.eleven18architecture.com

Physical Address:
1011 E. Colonial Dr. #307
Orlando, FL 32803
407-745-5300

© Copyright 2019 ELEVEN18 ARCHITECTURE, PL
All Rights Reserved Worldwide

PROJECT NAME:

STARBUCKS
TUSKAWILLA
3645 Aloma Ave.
Oviedo, FL 32765

ELEVEN18 PROJECT LEAD:
Maria Lopez
407-745-5300 Ext. 106
mlopez@eleven18architecture.com

PROJECT TEAM:
Javier Rosas

REVISIONS

#	DATE	DESC.
--	06.26.2023	PERMIT SUBMITTAL
1	07/10/23	COUNTY COMMENTS

A000
COVER SHEET

ARCHITECT'S GENERAL CONDITIONS

I GENERAL CONDITIONS

1. THESE INSTRUCTIONS ARE TO BE FOLLOWED BY ALL CONTRACTORS AND SUBCONTRACTORS WHEN PERFORMING THIS WORK. FAILURE TO DO SO MAY RESULT IN THE SUSPENSION OF ALL ACTIVITIES UNTIL DISPUTES ARE RESOLVED. ANY EXPENSES AND/OR DAMAGES INCURRED AS A RESULT OF DELAYS IN THE COMPLETION OF THE WORK DUE TO CONTRACTORS DISREGARD OF THESE INSTRUCTIONS SHALL BE BORNE BY THE CONTRACTOR.

2. CONTRACTOR SHALL PROVIDE AND MAINTAIN FULL INSURANCE AS REQUIRED BY THE GENERAL CONDITIONS OF THE OWNER. INSURANCE (EXCEPT WORKERS COMPENSATION) SHALL INCLUDE ARCHITECT AS ADDITIONAL INSURED. EVIDENCE OF INSURANCE SHALL BE PROVIDED TO THE OWNER AND ARCHITECT PRIOR TO COMMENCING WORK.

3. ARCHITECT IS NOT RESPONSIBLE FOR ERRORS, OMISSIONS OR DELAYS BY THE CONTRACTOR.

4. CONTRACTOR SHALL BE RESPONSIBLE FOR, PROVIDE, AND PAY FOR ALL MATERIALS, LABOR, EQUIPMENT, TOOLS, CONSTRUCTION EQUIPMENT, WAREHOUSING, TRANSPORTATION AND DELIVERY COSTS, HOISTING, REMOVAL AND DISPOSAL OF TRASH AND DEBRIS, AND OTHER FACILITIES AND SERVICES NECESSARY FOR THE EXECUTION AND COMPLETION OF THIS WORK AND THAT OF HIS/HER SUBCONTRACTORS.

5. CONTRACTOR SHALL BE RESPONSIBLE FOR ACTS AND OMISSIONS OF THE CONTRACTORS EMPLOYEES, SUBCONTRACTORS AND THEIR AGENTS AND EMPLOYEES, AND ANY OTHER PERSONS PERFORMING ANY OF THE WORK UNDER A CONTRACT WITH THE CONTRACTOR.

6. OWNER MAY PERFORM ADDITIONAL WORK IN THIS AREA THAT MAY OR MAY NOT BE A PART OF THIS CONTRACT WITH HIS OWN FORCES, UNDER SEPARATE CONTRACTS AND/OR WITH OTHER CONTRACTORS WHICH MAY BE WORKING ON THE PREMISES SIMULTANEOUS WITH THE DURATION OF THIS WORK. NO ACTION SHALL BE TAKEN ON THE PART OF THIS CONTRACTOR OR ANY SUBCONTRACTOR TO IMPEDE THE ACCESS OR OPERATION OF ANY OTHER CONTRACTOR ON THE PREMISES, REGARDLESS OF CONTRACTING PARTY OR UNION AFFILIATION. ANY CHANGES OR DELAYS ARISING FROM CONFLICTS DUE TO THIS CIRCUMSTANCE SHALL BE THE RESPONSIBILITY OF THE CONTRACTOR AT NO ADDITIONAL COST TO THE OWNER.

7. CONTRACTOR SHALL BE RESPONSIBLE FOR THE COMPATIBILITY, APPROVAL AND APPROPRIATE USE OF ALL ASSEMBLIES AND COMPONENTS REQUIRED THAT ARE NOT SPECIFICALLY IDENTIFIED OR SPECIFIED AS PART OF THIS WORK BUT MAY BE REQUIRED BY JURISDICTIONAL AGENCIES HAVING AUTHORITY OR THAT MAY BE REQUIRED TO COMPLETE THIS WORK.

8. CONTRACTOR IS RESPONSIBLE FOR WORKSITE SAFETY AND SHALL TAKE NECESSARY PRECAUTIONS TO ENSURE THE SAFETY AND PROTECTION OF THE WORKERS AND BUILDING OCCUPANTS AT ALL TIMES. REQUIREMENTS INCLUDE, BUT SHALL NOT BE LIMITED TO O.S.H.A. PART 1926, LATEST EDITION IN FORCE.

9. THE SPRINKLER SUBCONTRACTOR IS RESPONSIBLE FOR THE DESIGN AND LAYOUT OF THE SYSTEM, AND SUBMISSION OF ANY DRAWINGS, EQUIPMENT INFORMATION AND FLOW CALCULATIONS OR TEST DATA REQUIRED BY GOVERNING AUTHORITIES.

10. CONTRACTOR IS RESPONSIBLE FOR CONTRACTING WITH AN ENGINEER LICENSED IN THE STATE WHERE THE WORK IS BEING PERFORMED TO PROVIDE LIGHT GAUGE STEEL STUD FRAMING DESIGN (SPACINGS, GAUGES, SIZES, CONNECTIONS, ETC.)

11. CONTRACTORS CONTRACT AMOUNT SHALL INCLUDE A CONTINGENCY SUM OF 4% TO BE USED TO COVER COSTS ARISING FROM CONCEALED CONDITIONS WHICH COULD NOT HAVE BEEN REASONABLY FORESEEN OR ANTICIPATED, AND CHANGES IN SCOPE ARISING FROM ASSUMPTIONS AND CLARIFICATIONS PROVIDED BY THE CONTRACTOR TO THE OWNER AND ARCHITECT.

12. THE AUTHORITY HAVING JURISDICTION MAY REQUIRE A SURVEY BE PERFORMED AND SUBMITTED TO DEMONSTRATE THE STRENGTH OF RADIO SIGNALS FOR EMERGENCY SERVICES PERSONNEL. THIS IS NOT INCLUDED IN THE SCOPE OF WORK. BASED ON THE RESULTS OF THE SURVEY, THE AUTHORITY HAVING JURISDICTION MAY REQUIRE THAT A TWO-WAY RADIO COMMUNICATION ENHANCEMENT SYSTEM BE PROVIDED. THE DESIGN OF THIS SYSTEM IS NOT INCLUDED IN THE SCOPE OF WORK.

II CHANGE ORDERS

1. CONTRACTORS DETERMINATION AND COMPLIANCE WITH GOVERNING REGULATIONS AND ORDERS AS ISSUED BY GOVERNING AUTHORITIES DOES NOT CONSTITUTE SUBSTITUTIONS AND DOES NOT CONSTITUTE A BASIS FOR CHANGE ORDERS.

2. ALL CHANGES, REVISIONS AND MODIFICATIONS TO THE WORK SHALL BE DOCUMENTED AND ISSUED BY THE ARCHITECT.

3. NO CONTRACTOR OR SUBCONTRACTOR SHALL PERFORM ADDITIONAL WORK UNLESS DIRECTED BY OWNER, OR ARCHITECT. ADDITIONAL CHARGES WILL NOT BE APPROVED FOR WORK WITHOUT PROPER AUTHORIZATION.

4. GENERAL CONTRACTOR SHALL BE RESPONSIBLE FOR COSTS INCURRED FOR NONCOMPLIANCE WITH THESE CONTRACT DOCUMENTS. CONTRACTOR WILL NOT BE ALLOWED CHANGE ORDERS FOR PROBLEMS ARISING FROM NEGLECT OF PROVISIONS INCLUDED IN THESE CONDITIONS.

III EXISTING CONDITIONS

1. ANY AREA OUTSIDE THE LIMITS OF CONSTRUCTION DISTURBED BY OPERATIONS OF THE CONTRACTOR SHALL BE RESTORED AT THE CONTRACTORS EXPENSE.

2. CONTRACTOR SHALL ACCEPT PREMISES AS FOUND. OWNER AND ARCHITECT ACCEPTS NO RESPONSIBILITY FOR THE CONDITION OF THE EXISTING SITE OR STRUCTURES AT THE TIME OF BIDDING OR THEREAFTER.

3. CONTRACTOR SHALL TAKE EXCEPTIONAL CARE TO PROTECT AND MAINTAIN EXISTING BUILDING AND PROPERTY AND SHALL CLEAN OR REPAIR ANY DAMAGE TO SAME CAUSED BY HIS/HER SUBCONTRACTORS, SUPPLIERS AND CRAFTSMAN AT NO COST TO THE OWNER.

4. CONTRACTOR SHALL FIELD VERIFY ALL CONDITIONS AND DIMENSIONS PRIOR TO PURCHASING MATERIALS, INSTALLATON OR PERFORMING ANY WORK. INCLUDE COST FOR ALL WORK DESCRIBED IN CONTRACT DOCUMENTS AND REQUIRED OR IMPLIED BY EXISTING CONDITIONS. BIDDERS SHALL BE RESPONSIBLE FOR LACK OF VERIFICATION. NOTIFY ARCHITECT OF ANY CONFLICTS BETWEEN THE DRAWINGS AND EXISTING CONDITIONS RELATED TO THE EXECUTION OF THIS WORK.

5. ALL DEMOLITION ACTIVITIES SHALL COMPLY WITH NFPA CODE 241 'BUILDING CONSTRUCTION', ANSI-A10 SERIES STANDARD FOR 'SAFETY REQUIREMENTS' FOR CONSTRUCTION AND DEMOLITION', NEGA ELECTRICAL DESIGN LIBRARY 'TEMPORARY ELECTRICAL FACILITIES', AND 'MANUAL OF ACCIDENT PREVENTION IN CONSTRUCTION' OF THE ASSOCIATED GENERAL CONTRACTORS OF AMERICA.

6. CONTRACTOR SHALL VERIFY THE INTEGRITY OF ALL EXISTING FIRE RATED OPENINGS WITHIN THE SCOPE OF THIS WORK AND SHALL BE RESPONSIBLE FOR THE FIRE-SAFING AS REQUIRED BY JURISDICTIONAL AUTHORITIES TO PROVIDE A POSITIVE SMOKE-TIGHT SEAL TO MAINTAIN INTEGRITY OF WALL CONSTRUCTION AND RATING.

7. CONTRACTOR SHALL TAKE NECESSARY MEASURES TO ENSURE THAT NEIGHBORING TENANTS AND RESIDENTS ARE NOT DISTURBED IN ANY WAY DURING THE CONSTRUCTION PROCESS. ANY WORK CREATING LOUD NOISES, HAZARDOUS FUMES OR NOXIOUS OR OFFENSIVE ODORS MUST BE COORDINATED WITH OWNER IN ADVANCE SO ACCOMODATIONS CAN BE MADE.

8. ANY CONTACT WITH TENANTS OF SURROUNDING PROPERTIES SHALL BE CONDUCTED IN THE MOST COURTEOUS MANNER POSSIBLE.

9. IF CONSTRUCTION IS TAKING PLACE WITHIN AN OCCUPIED SPACE OR STRUCTURE, CONTRACTOR SHALL TAKE MEASURES TO ENSURE THAT DAY-TO-DAY OPERATIONS ARE NOT DISRUPTED OR AFFECTED IN ANY WAY.

10. PATCH WALLS, FLOORS AND CEILINGS AS REQUIRED ACCOMMODATING NEW CONSTRUCTION AND FINISHES.

11. CONTRACTOR SHALL COORDINATE W/OWNER REGARDING THE REMOVAL, DISPOSAL OR SALVAGE OF EXISTING FIXTURES, EQUIPMENT & FURNISHINGS EFFECTED BY THIS WORK.

12. ANY PORTION OF THIS WORK SHALL NOT OBSTRUCT OR CAUSE TO BE INOPERATIVE THE FIRE PROTECTION SYSTEMS OF EXISTING SITE AND/OR ADJACENT PROPERTIES. COORDINATE ALL WORK INVOLVING EXISTING FIRE ALARM/VOICE EVACUATION SYSTEM(S) WITH OWNER.

IV CONTRACT DOCUMENTS

1. BUILDING DEPARTMENT APPROVED PLANS SHALL BE KEPT IN A PLAN BOX AND SHALL NOT BE USED BY WORKMEN. ALL CONSTRUCTION SETS SHALL REFLECT THE SAME INFORMATION. THE CONTRACTOR SHALL ALSO MAINTAIN, IN GOOD CONDITION, ONE COMPLETE SET OF PLANS WITH ALL REVISIONS, ADDENDUM'S AND CHANGE ORDERS, ON THE PREMISES AT ALL TIMES. THESE ARE TO BE KEPT UNDER THE CARE OF THE SUPERINTENDENT.

2. ALL CONSTRUCTION ITEMS NOT SPECIFIED OR INDICATED ON DRAWINGS SHALL BE COORDINATED W/ ARCHITECT AND/OR ADDRESSED BY THE OWNER, THE CONTRACTOR OR HIS SUBCONTRACTORS.

3. CONTRACTOR SHALL BRING ANY CONFLICTS OR DISCREPANCIES FOUND IN THE DRAWINGS TO THE ATTENTION OF THE ARCHITECT AND OWNER PRIOR TO PURCHASING, INSTALLATION AND/OR CONSTRUCTION.

4. MATERIALS, PRODUCTS AND ASSEMBLIES SPECIFIED IN THIS WORK BY THE ARCHITECT, ARE BASED UPON LITERATURE, DRAWINGS OR OTHER DESCRIPTIVE MATERIALS SUPPLIED BY THE MANUFACTURER. IF ANY PRODUCT, MATERIAL OR ASSEMBLY FAILS TO MEET THE CLAIMS OF THE MANUFACTURER WHEN INSTALLED AND USED IN ACCORDANCE WITH THE MANUFACTURERS RECOMMENDATIONS, THE ARCHITECT SHALL NOT BE HELD RESPONSIBLE FOR LESS THAN SATISFACTORY RESULTS.

5. CONTRACTOR SHALL BE RESPONSIBLE TO REPORT TO AND DISCUSS WITH THE ARCHITECT PRIOR TO PURCHASING ANY MATERIALS OR INSTALLATIONS SPECIFIED OR INDICATED ON THE DRAWINGS WHICH THE CONTRACTOR BELIEVES WILL NOT PROVIDE SATISFACTORY RESULTS. CONTRACTOR WILL PROVIDE A WORKABLE SOLUTION TO THE ARCHITECT FOR REVIEW PRIOR TO INSTALLING. IF CONTRACTOR FAILS TO NOTIFY THE ARCHITECT OR IF RECOMMENDATIONS ARE ACCEPTED, CONTRACTOR WILL BE RESPONSIBLE FOR INSTALLATION AND SATISFACTORY RESULTS.

6. DIMENSIONS TAKE PRECEDENCE OVER DRAWINGS. DO NOT SCALE DRAWINGS TO DETERMINE LOCATIONS. LARGE SCALE DRAWINGS GOVERN OVER SMALLER SCALE DRAWINGS. ARCHITECT SHALL BE NOTIFIED OF ANY DISCREPANCY WHICH OCCURS PRIOR TO CONTINUING WITH THE WORK.

V SHOP DRAWINGS, SUBMITTALS & SUBSTITUTIONS

1. CONTRACTOR SHALL PROCURE MATERIALS SO AS NOT TO DELAY SUBSTANTIAL COMPLETION. NOTIFY OWNER WHEN SUBMITTING FINAL BID OF ANY MATERIAL DELIVERY WHICH COULD DELAY COMPLETION OF CONTRACT BEYOND THE CONTRACT DATE.

2. G.C. SHALL SUBMIT SHOP DRAWINGS AND PRODUCT INFORMATION PRIOR TO PURCHASING, INSTALLATION AND/OR CONSTRUCTION.

3. ALL SUBMITTALS TO THE ARCHITECT SHALL BE SUBMITTED 16 DAYS PRIOR TO DATE REQUIRED.

4. CONTRACTORS SHALL REVIEW ALL SUBMITTALS PRIOR TO SUBMITTING TO ARCHITECT FOR ARCHITECTS REVIEW. SUBMITTALS SHALL BEAR THE STAMP OF THE CONTRACTOR INDICATING HIS/HER REVIEW. NO SUBMITTAL SHALL BE PROCESSED BY ARCHITECT WITHOUT THIS STAMP.

5. MANUFACTURER'S OF SPECIFIED ITEMS ARE NOTED FOR QUALITY AND DESIGN. SUBSTITUTE PRODUCTS ARE SUBJECT TO APPROVAL BY ARCHITECT AND OWNER. WHERE SUBSTITUTIONS OF EQUIVALENT PRODUCTS OR ASSEMBLIES ARE PERMITTED, CONTRACTOR IS ENCOURAGED TO SUBMIT ALTERNATE PRODUCTS FOR CONSIDERATION IN AN EFFORT TO REDUCE THE CONSTRUCTION COST OR TIME. REASONABLE REQUESTS WILL BE REVIEWED FOR COMPLIANCE WITH THE INTENT OF THE CONSTRUCTION DOCUMENTS. IF DOCUMENTS STATE THAT SUBSTITUTIONS ARE NOT PERMITTED, CONTRACTOR SHALL PROVIDE MANUFACTURER/PRODUCT SPECIFIED.

VI FIRE-RESISTANCE-RATED CONSTRUCTION

1. REFERENCE MECHANICAL, PLUMBING AND ELECTRICAL DRAWINGS FOR DETAILS OF UTILITY WALL PENETRATIONS. ALL FIRE-RATED WALLS MUST BE CLEARLY AND PERMANENTLY LABELED ABOVE FINISH CEILING LEVEL AS REQUIRED BY CODE.

2. ALL FIRE-RATED MATERIALS, ASSEMBLIES AND PENETRATIONS MUST COMPLY WITH REQUIREMENTS OF THEIR ASSOCIATED U.L. (OR OTHER APPROVED TESTING AGENCY) DESIGN.

3. CONTRACTOR SHALL ATTACH AND STAGGER WALLBOARD ON ALL FIRE-RATED WALLS AS REQUIRED BY U.L. DESIGN DESCRIPTION.

VII EXECUTION

1. CONSTRUCTION BARRICADES ARE TO BE INSTALLED TO PREVENT ACCESS BY UNAUTHORIZED PERSONAL TO CONSTRUCTION AREA. BARRICADES SHALL BE CONSTRUCTED IN A MANNER TO PREVENT DEMOLITION DEBRIS AND DUST FROM CONTAMINATING ADJACENT AREAS.

2. CONTRACTOR SHALL EXAMINE ALL SURFACES TO DETERMINE THAT THEY ARE SOUND, DRY, CLEAN AND READY TO RECEIVE FINISHES PRIOR TO INSTALLATION. START OF INSTALLATION SHALL IMPLY ACCEPTANCE OF SUBSTRATE AND SHALL NOT BE GROUNDS FOR CLAIMS AGAINST IMPROPER PERFORMANCE OF INSTALLED MATERIALS.

3. PERFORM ALL WORK IN STRICT ACCORDANCE WITH MANUFACTURERS SPECIFICATIONS AND INSTRUCTIONS AND IN A MANNER CONSISTENT WITH THE HIGHEST STANDARD OF WORKMANSHIP.

4. ALL FURNISHINGS AND EQUIPMENT SHALL BE PROVIDED AND INSTALLED BY THE OWNER UNLESS NOTED OTHERWISE. CONTRACTOR SHALL COORDINATE WITH OWNER'S CONSULTANTS AND REPRESENTATIVES TO PROVIDE ACCESS SO WORK CAN BE ACCOMPLISHED IN A TIMELY MANNER.

5. CONTRACTOR SHALL BE RESPONSIBLE FOR THE COMPLETE SECURITY OF THE SITE WHILE WORK IS IN PROGRESS, AND UNTIL THE JOB IS COMPLETE AND HAS BEEN ACCEPTED BY THE OWNER.

6. POSSESSION, USE OR BEING UNDER THE INFLUENCE OF ALCOHOL, NARCOTICS OR ILLEGAL SUBSTANCES OF ANY TYPE ON THE PREMISES IS STRICTLY PROHIBITED.

7. CONTRACTOR SHALL INSTALL AND MAINTAIN ALL NECESSARY COVERINGS, PROTECTIVE ENCLOSURES AND DUST BARRIERS TO PROTECT ALL WORK AND FINISHES. REPAIR AND REPLACE ANY DAMAGES CAUSED BY IMPROPER PROTECTIONS AT NO ADDITIONAL COST TO THE OWNER.

8. PROVIDE TEMPORARY WATERTIGHT WEATHERPROOF CLOSURES AT ALL ROOF OPENINGS UNTIL AFTER INSTALLATION OF ROOFTOP MOUNTED MECHANICAL UNITS, DRAINS, VENTS, ETC. ROOF IS THEN TO BE SEALED IN ACCORDANCE WITH ROOF WARRANTY.

9. PROVIDE CONTROL JOINTS TO PREVENT CRACKING IN ALL MATERIALS AND ASSEMBLIES. SUBMIT CONTROL JOINT LAYOUTS TO OWNER AND ARCHITECT FOR REVIEW PRIOR TO PURCHASE, INSTALLATION AND / OR CONSTRUCTION.

10. ALL LOAD BEARING WALLS AND NON LOAD BEARING CMU WALLS ARE TO BE CAULKED AT INTERSECTIONS. TYPICAL.

11. WHERE DISSIMILAR METALS CONTACT, PAINT FACE OF ONE WITH TWO COATS OF BITUMINOUS PAINT AT THE AREA OF CONTACT.

12. ALL ATTACHMENT HARDWARE SHALL BE APPROPRIATELY CAMOUFLAGED AND CONCEALED. FINISH COLOR OF ALL ATTACHMENT HARDWARE SHALL MATCH ADJACENT SURFACES U.N.O.

13. PROVIDE PRESSURE TREATED WOOD FOR ALL FRAMING, BLOCKING, FURRING, NAILING STRIPS, BUILT INTO EXTERIOR MASONRY WALLS, WOOD IN CONTACT WITH CONCRETE AND IN CONJUNCTION WITH ROOFING AND MOISTURE-PERMEABLE FLOORS. PROVIDE FIRE-RETARDANT TREATED WOOD FOR CONCEALED BLOCKING AND FOR EXPOSED LUMBER AND PLYWOOD IN HABITABLE SPACE. NON-STRUCTURAL WOOD ON EXTERIOR WALLS TO BE MOISTURE-RESISTANT.

14. ALL WOOD, LUMBER AND PLYWOOD MATERIALS SHALL BE FIRE-RESISTANT AND/OR FIRE-RATED AS REQUIRED BY CODE.

15. COMBUSTIBLE MATERIALS SHALL NOT BE PERMITTED IN THE RETURN AIR PLENUM. ALL INSULATION EXPOSED TO CEILING PLENUM SHALL BE FIRE AND DUST PROOF.

16. CONTRACTOR SHALL PROVIDE SOLID 2" WOOD BACKING WITHIN WALLS FOR ANCHORAGE OF ALL WALL MOUNTED SHELVES, RAILS, TOILET ACCESSORIES, WOODWORK, ETC. AND AT ALL LOCATIONS DIRECTED BY OWNER. 2x6 CONT. WOOD BLOCK'G SHALL BE PROVIDED AT TOP AND BOTTOM OF ALL MILLWORK. COORDINATE LOCATION OF ALL BLOCKING / BACKING W ID DWGS. ALL WOOD BACKING SHALL MEET THE REQUIREMENTS OF FBC 603 FOR COMBUSTIBLE MATERIAL.

17. CONTRACTOR SHALL PROVIDE, FRAME AND FINISH ALL OPENINGS AS REQUIRED FOR ELECTRICAL AND MECHANICAL PENETRATIONS. ELECTRICAL PANELS, JUNCTION BOXES, RECESSED CABINETS, ETC. OCCURRING IN FIRE-RATED WALLS SHALL BE CONSTRUCTED IN ACCORDANCE WITH U.L. DESIGN REQUIREMENTS.

18. COORDINATE WITH ELECTRICAL CONTRACTOR REGARDING THE MOUNTING HEIGHT OF ALL SWITCHES AND OUTLETS AT MILLWORK, COUNTERS, SHELVING, SINKS ETC. COMPLY WITH APPLICABLE ACCESSIBILITY REQUIREMENTS. REFER QUESTIONABLE MOUNTING HEIGHTS TO ARCHITECT FOR REVIEW.

19. ALL PENETRATIONS THROUGH ROOF SHALL BE COORDINATED WITH THE HOLDER OF THE ROOF WARRANTY AND SHALL NOT VOID ANY EXISTING WARRANTIES IN ANY WAY. PROVIDE POSITIVE DRAINAGE AWAY FROM OPENINGS. CONTRACTOR IS SOLELY RESPONSIBLE FOR MAINTAINING INTEGRITY OF ROOFING AND ROOF WARRANTY. COORDINATE WITH OWNER.

20. SMOKING IS PROHIBITED INSIDE THE BUILDING AT ANY TIME.

21. COORDINATE THE STAGING AREA WITH THE OWNER OR OWNERS REPRESENTATIVE PRIOR TO STARTING WORK. G.C. SHALL MAINTAIN A CLEAN AND WELL DEFINED STAGING AREA. PROVIDE DEMISING WALLS / VISUAL SCREENS WHERE REQUIRED BY OWNER OR AHJ.

22. STORAGE OF MATERIALS: CONTRACTOR SHALL BE RESPONSIBLE FOR THE PROPER CARE AND PROTECTION OF ALL HIS/HER MATERIALS, EQUIPMENT, TOOLS, ETC. NO SUBCONTRACTOR SHALL STORE HIS/HER MATERIALS, EQUIPMENT, TOOLS, ETC., SO THAT THEY IMPEDE THE WORK OF ANY OTHER SUBCONTRACTOR OR THE USE OF THE BUILDING BY THE OWNER.

23. CLEANUP: CONTRACTOR SHALL BE RESPONSIBLE FOR THE CLEANUP OF DEBRIS ACCUMULATED BY HIS/HER WORK AND THAT OF HIS/HER SUBCONTRACTORS AND SUPPLIERS. AT THE COMPLETION OF THE DAY'S WORK, CONTRACTOR SHALL REMOVE ALL TOOLS AND DEBRIS AND LEAVE CONSTRUCTION AREA - INCLUDING OUTDOORS - CLEAN AND FREE OF OBSTRUCTION. OCCUPIED AREAS SHALL BE MAINTAINED IN A CLEAN AND ORDERLY MANNER AT ALL TIMES.

24. TRASH AND RECYCLE DUMPSTERS SHALL BE LOCATED AS APPROVED BY OWNER. USE OF EXISTING TRASH DUMPSTERS AND COMPACTORS SHALL NOT BE UTILIZED UNDER ANY CIRCUMSTANCES.

25. PARKING: CONTRACTOR SHALL COORDINATE THE PARKING AREA WITH THE OWNER AND OWNER'S REPRESENTATIVE PRIOR TO START OF THE WORK. VEHICLES ARE NOT PERMITTED TO REMAIN PARKED IN HANDICAPPED DESIGNATED SPACES. LOADING AREAS ARE FOR LOADING AND UNLOADING ONLY.

26. G.C. SHALL PROVIDE AND INSTALL PORTABLE FIRE EXTINGUISHERS AS INDICATED ON PLAN AND AS REQUIRED BY AHJ. PROVIDE TYPE AND SIZE REQUIRED AT THE LOCATIONS INDICATED. IF VISIBLE TO THE PUBLIC, PROVIDE A RECESSED CABINET, COORDINATE AND VERIFY W/ SPECIFICATIONS. MAXIMUM TRAVEL DISTANCE TO EXTINGUISHER SHALL BE 75 FEET.

VIII CLOSE-OUT

1. G.C. IS RESPONSIBLE FOR PROVIDING AND INSTALLING ADDRESS / UNIT NUMBER SIGNAGE AT FRONT AND REAR ENTRIES OR AS INDICATED ON DRAWINGS. SIGNAGE TO MEET LOCAL CODES.

2. 24 HOURS PRIOR TO PUNCH-LIST OF ANY PHASE, THE CONTRACTOR SHALL THOROUGHLY CLEAN ALL SURFACES OF DUST, DEBRIS, AND LOOSE CONSTRUCTION MATERIAL.

3. UPON COMPLETION OF CONSTRUCTION, CONTRACTOR SHALL CLEAN THE WORK AREA TO OWNERS SATISFACTION. FINAL CLEANUP SHALL INCLUDE THE FOLLOWING: VACUUM OR MOP ALL FLOORS. SWEEP, DAMP MOP, AND WAX RESILIENT FLOORING. DUST, DIRT, PAINT DRIPPINGS, OIL, GREASE, MASTIC, ADHESIVES, AND OTHER FOREIGN MATERIALS AND BLEMISHES SHALL BE REMOVED FROM SIGHT-EXPOSED FINISHES, INCLUDING PIPES AND EQUIPMENT. WINDOWS, GLASS UNITS, GLASS DOORS AND MIRRORS SHALL BE WASHED. PAINT OVERRUNS AND PUTTY SMEARS SHALL BE REMOVED AND HARDWARE SHALL BE RUBBED CLEAN WITH FLANNEL CLOTH.

4. WORK DAMAGED DURING CONSTRUCTION OR NOT CONFORMING TO SPECIFIED STANDARDS, TOLERANCES OR MANUFACTURERS INSTRUCTIONS FOR INSTALLATION SHALL BE REPLACED BY THE CONTRACTOR, AT NO ADDITIONAL COST TO THE OWNER.

5. CONTRACTOR SHALL BE RESPONSIBLE FOR AND SHALL REPLACE OR REMEDY ANY FAULTY, IMPROPER, OR INFERIOR MATERIALS OR WORKMANSHIP WHICH SHALL APPEAR WITHIN ONE (1) YEAR (OR CONTRACTUALLY AGREED UPON TERM REQUIRED BY OWNER) AFTER THE COMPLETION AND ACCEPTANCE OF THE WORK UNDER THIS CONTRACT.

6. AN OPERATIONAL TEST OF THE EMERGENCY LIGHTING SYSTEM MAY BE REQUIRED. COORDINATE WITH BUILDING OFFICIALS.

FLORIDA PRODUCT APPROVALS & MIAMI-DADE NOTICES OF ACCEPTANCE

PRODUCT DESCRIPTION	MANUFACTURER / MODEL	FILE NO.	DATE APPROVED	DATE EXPIRES
TPO ROOF	FIRESTONE / ULTRAPLY	NOA 15-0209.04	29 AUG 2019	29 AUG 2024
ALUMINUM STOREFRONT SYSTEM	KAWNEER /TRIFAB 451T STOREFRONT SYSTEM	FL 32590	13 APR 2021	31 DEC 2023
DRIVE-THRU WINDOW	READY ACCESSTM SERIES 600 MOER DRIVE-THRU SERVICE WINDOW	FL 5102-R6	13 OCT 2020	31 DEC 2023
HOLLOW METAL DOOR	MESKER DOOR, LLC / N SERIES OUTSWING STEEL OPAQUE DOOR	NOA 20-0708.03	23 DEC 2020	16 JUL 2025
WOOD PANELS SYSTEM	NICHIHA (AWP) ARCHITECTURAL WALL PANELS 3030	NOA 22-0427.05	19 MAY 2022	01 JUN 2027

COPYRIGHT STATEMENT

These documents, their contents, and the ideas, designs, and concepts presented here-in are the property of ELEVEN18 Architecture and are issued only for the specific project noted on these documents. Holders of these documents that have established a mutually agreed contractual relationship with ELEVEN18 Architecture have been granted a limited license to reproduce these documents in relationship to the specific project referenced. All others are subject to US Copyright Law as defined by Title 17 of the United States Code and other regional laws as may apply. Any revisions, reproductions, modifications, or re-use of these documents without the express written consent of ELEVEN18 Architecture is prohibited by Law.

10 JUL 2023

STATE OF FLORIDA
MATTHEW A CONTE
AR96819
REGISTERED ARCHITECT

Matt Conte, AIA
FL. REG.#AR96819

ELEVEN 18 ARCHITECTURE
A WOMEN'S BUSINESS ENTERPRISE
FL License: AA26001884

Mailing Address:
424 E. Central Blvd. #542
Orlando, FL 32801
www.eleven18architecture.com

Physical Address:
101 E. Colonial Dr. #307
Orlando, FL 32803
407-745-5300

© Copyright 2019 ELEVEN18 ARCHITECTURE, PL
All Rights Reserved Worldwide

PROJECT NAME:

STARBUCKS TUSKAWILLA
3645 Aloma Ave.
Oviedo, FL 32765

ELEVEN18 PROJECT LEAD:
Maria Lopez
407-745-5300 Ext. 106
mlopez@eleven18architecture.com

PROJECT TEAM:
Javier Rosas

REVISIONS

#	DATE	DESC.
--	06.26.2023	PERMIT SUBMITTAL

A001

GENERAL CONDITIONS

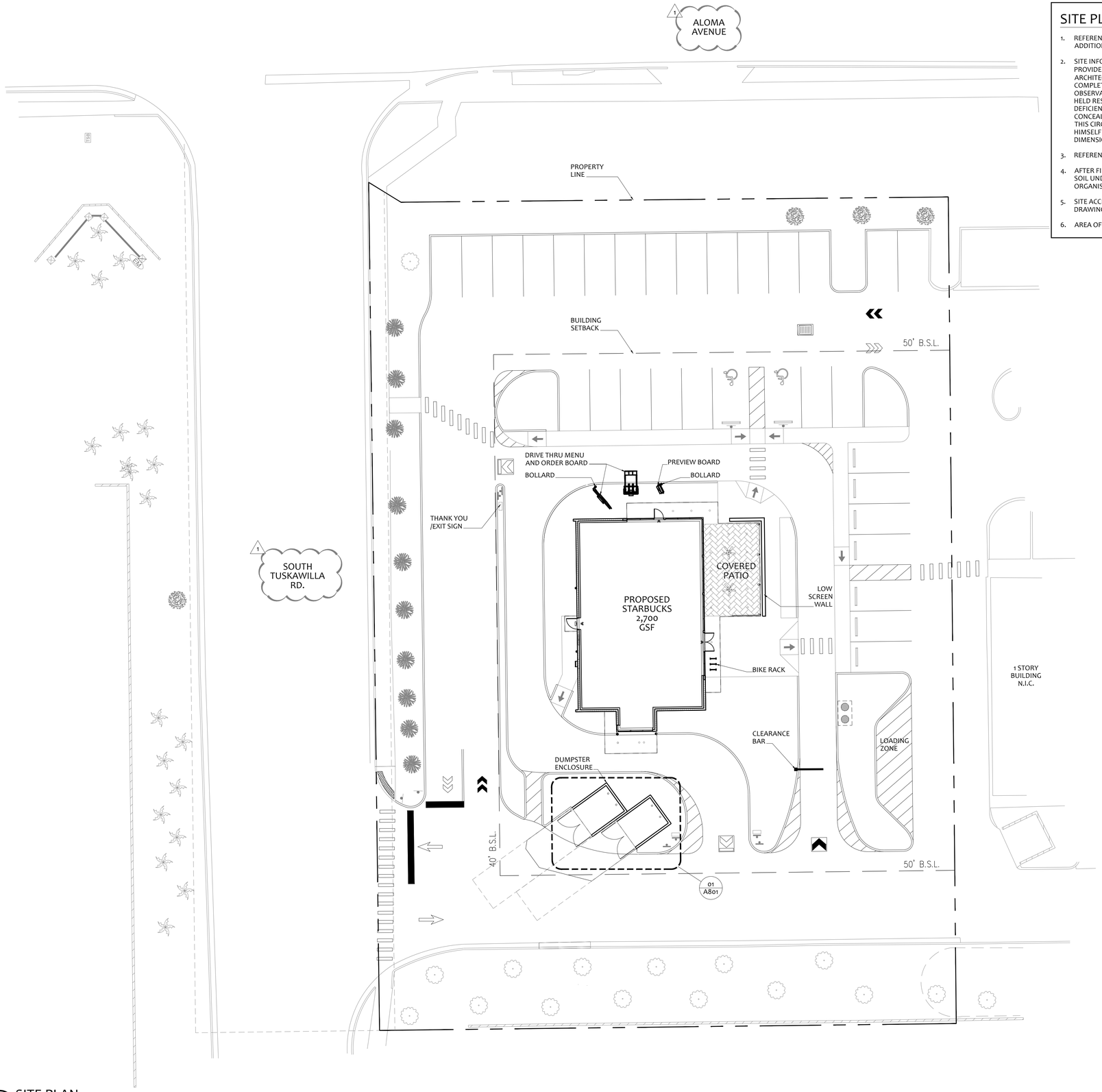

01 SITE PLAN
1/16" = 1'-0"

SITE PLAN NOTES

1. REFERENCE SHEET A-001 FOR GENERAL CONDITIONS AND ADDITIONAL REQUIREMENTS AFFECTING THIS WORK.
2. SITE INFORMATION SHOWN HEREIN IS TAKEN FROM INFORMATION PROVIDED BY OTHERS NOT UNDER CONTRACT/CONTROL OF THE ARCHITECT. THE ARCHITECT HAS VERIFIED THE ACCURACY AND/OR COMPLETENESS OF THIS INFORMATION BASED ON VISUAL OBSERVATION ONLY. THEREFORE THE ARCHITECT SHALL NOT BE HELD RESPONSIBLE FOR ERRORS, OMISSIONS, CONFLICTS, DEFICIENCIES OR INACCURACIES ARISING FROM DISCOVERY OF CONCEALED, UNKNOWN OR DIFFERING CONDITIONS AS A RESULT OF THIS CIRCUMSTANCE. CONTRACTOR SHOULD FULLY AQUAINT HIMSELF WITH THE SITE AND FIELD VERIFY ALL CONDITIONS AND DIMENSIONS PRIOR TO PERFORMING ANY WORK.
3. REFERENCE CIVIL DRAWINGS FOR LOCATION OF BUILDING ON SITE.
4. AFTER FINAL GRADING AND PRIOR TO CONSTRUCTION, PRE-TREAT SOIL UNDER NEW CONSTRUCTION FOR WOOD DESTROYING ORGANISMS PER FBC 1816.
5. SITE ACCESSORIES SHOWN FOR REFERENCE ONLY, REFERENCE CIVIL DRAWINGS FOR FINAL LOCATIONS.
6. AREA OF WORK SHOWN HATCHED.

COPYRIGHT STATEMENT

These documents, their contents, and the ideas, designs, and concepts presented here-in are the property of ELEVEN18 Architecture and are issued only for the specific project noted on these documents. Holders of these documents that have established a mutually agreed contractual relationship with ELEVEN18 Architecture have been granted a limited license to reproduce these documents in relationship to the specific project referenced. All others are subject to US Copyright Law as defined by Title 17 of the United States Code and other regional laws as may apply. Any revisions, reproductions, modifications, or re-use of these documents without the express written consent of ELEVEN18 Architecture is prohibited by Law.

10 JUL 2023

STATE OF FLORIDA
MATTHEW A. CONTE
AR96819
REGISTERED ARCHITECT

Matt Conte, AIA
FL. REG.#AR96819

ELEVEN 18 ARCHITECTURE
A WOMEN'S BUSINESS ENTERPRISE
FL License: AA26001884

Mailing Address:
424 E. Central Blvd. #542
Orlando, FL 32801
www.eleven18architecture.com

Physical Address:
1011 E. Colonial Dr. #307
Orlando, FL 32803
407-745-5300

© Copyright 2019 ELEVEN18 ARCHITECTURE, PL
All Rights Reserved Worldwide

PROJECT NAME:

STARBUCKS TUSKAWILLA
3645 Aloma Ave.
Oviedo, FL 32765

ELEVEN18 PROJECT LEAD:
Maria Lopez
407-745-5300 Ext. 106
mlopez@eleven18architecture.com

PROJECT TEAM:
Javier Rosas

REVISIONS

#	DATE	DESC.
--	06.26.2023	PERMIT SUBMITTAL
1	07/10/23	COUNTY COMMENTS

0 4' 8' 16' 32'

NORTH

A002
SITE PLAN

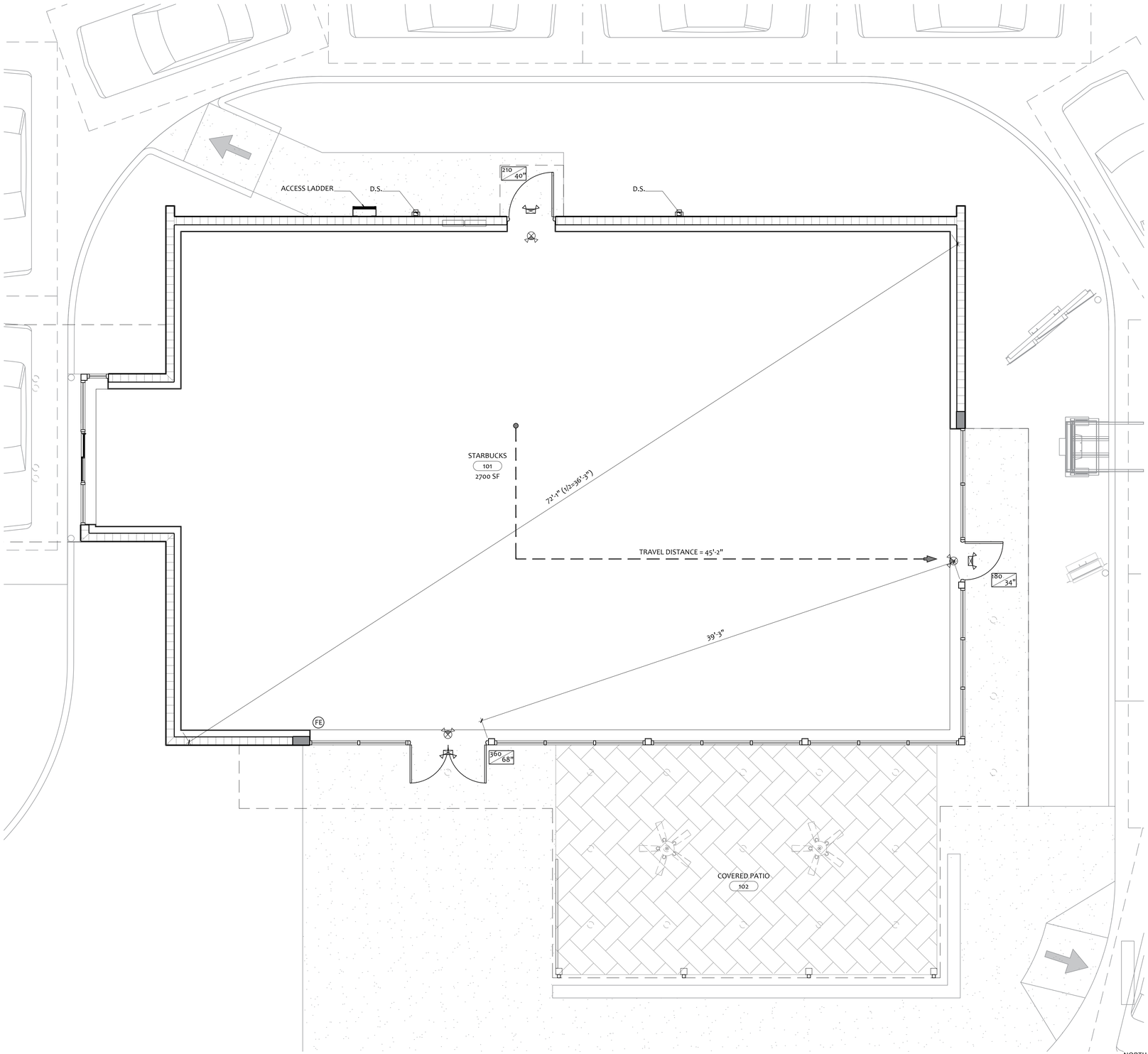

01 LIFE SAFETY PLAN
1/4" = 1'-0"

GENERAL LIFE SAFETY NOTES

1. REFERENCE SHEET A-000 FOR RATINGS OF STRUCTURAL ELEMENTS
2. FIRE EXTINGUISHERS SHALL BE LOCATED IN ACCORDANCE WITH THE REQUIREMENTS OF NFPA 10 & SECTION 13-6 OF NFPA 1 OF THE FFPC LOCATED SO THAT ALL AREAS ARE WITHIN 75'-0" OF AN EXTINGUISHER. FOR MECHANICAL AND ELECTRICAL ROOMS, USE A "2A:10B:C" LOCATED SO THAT ALL AREAS ARE WITHIN 50'-0" OF AN EXTINGUISHER. FOR KITCHENS USE A "K" EXTINGUISHER SO THAT ALL AREAS ARE WITHIN 30'-0" OF AN EXTINGUISHER.
3. COORDINATE FIRE EXTINGUISHER FINAL LOCATIONS WITH TI DRAWINGS.
4. EXIT DOOR TACTILE SIGNAGE SHALL BE PROVIDED AT EACH EXIT DOOR IN ACCORDANCE WITH SECTION 7.10.1.3, NFPA 101, 2018 EDITION

1

LIFE SAFETY LEGEND

00 / 00"	EXIT WIDTH INDICATOR (SHOWING CLEAR WIDTH OF OPENING AND NUMBER OF OCCUPANTS THAT CLEAR WIDTH CAN SERVE PER CODE)	TRAVEL DISTANCE	TRAVEL DISTANCE INDICATOR (SHOWING EXIT ACCESS TRAVEL DISTANCE FROM MOST REMOTE POINTS IN EACH AREA)
FE	FIRE EXTINGUISHER (10LBS 2A/10B/C) IN SEMI-RECESSED CABINET, TBD		EXIT/EMERGENCY LIGHTING; SEE ELECTRICAL DRAWINGS

NOTES:
ALL EMERGENCY/NIGHT LIGHTS & EXITS SIGNS ARE ON EMERGENCY LIGHTING CIRCUITS, PER ELECTRICAL DWGS.

LIFE SAFETY SUMMARY CHART

PER FBC TABLE 1004.1.1

FBC 2020 FUNCTION OF SPACE	PROPOSED AREA (SQ. FT.)	SQ. FT. PER OCCUPANT	OCCUPANT LOAD	EGRESS WIDTH REQUIRED (HORIZONTAL)	EGRESS WIDTH PROVIDED (HORIZONTAL)
KITCHEN	1071.27	200 GROSS	6	6 X 0.2" = 1.2"	40"
ASSEMBLY (WITHOUT CIRC.)	1144.5	15 NET	77	77 X 0.2" = 15.4"	102"
TOTAL	--	--	83	16.6"	142"

FBC TABLE 1017.2 REQUIRES THAT THE MAXIMUM EXIT ACCESS TRAVEL DISTANCE NOT EXCEED 200' (UN-SPRINKLERED). NO TRAVEL DISTANCE EXCEEDS THIS DISTANCE.

1

LIFE SAFETY SUMMARY CHART

PER NFPA 101 7.3.1.2

NFPA 101 FUNCTION OF SPACE	PROPOSED AREA (SQ. FT.)	SQ. FT. PER OCCUPANT	OCCUPANT LOAD	EGRESS WIDTH REQUIRED (HORIZONTAL)	EGRESS WIDTH PROVIDED (HORIZONTAL)
KITCHEN	1071.27	100 GROSS	11	11 X 0.2" = 2.2"	40"
ASSEMBLY (WITHOUT CIRC.)	1144.5	15 NET	77	77 X 0.2" = 15.4"	102"
TOTAL	--	--	88	17.6"	142"

NFPA 101 36.2.6 REQUIRES THAT THE MAXIMUM EXIT ACCESS TRAVEL DISTANCE NOT EXCEED 150' (UN-SPRINKLERED). NO TRAVEL DISTANCE EXCEEDS THIS DISTANCE.

INSTALLATION OF FIRE EXTINGUISHERS SHALL COMPLY WITH FLORIDA FIRE PREVENTION CODE 1 SECTION 13.6.1.1 PROVIDE WALL MOUNTED, PORTABLE FIRE EXTINGUISHERS AS INDICATED ON THE PLAN. PROVIDE TYPE 2-A:10-B:C CLASS A LIGHT HAZARD.

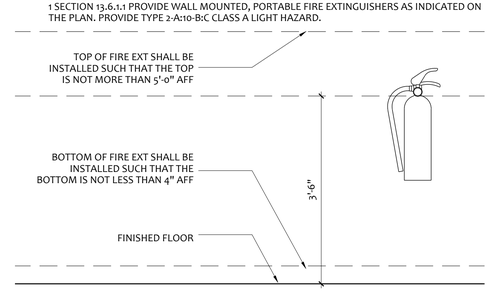

02 FIRE EXTINGUISHER DETAIL
3/4" = 1'-0"

COPYRIGHT STATEMENT

These documents, their contents, and the ideas, designs, and concepts presented here-in are the property of ELEVEN18 Architecture and are issued only for the specific project noted on these documents. Holders of these documents that have established a mutually agreed contractual relationship with ELEVEN18 Architecture have been granted a limited license to reproduce these documents in relationship to the specific project referenced. All others are subject to US Copyright Law as defined by Title 17 of the United States Code and other regional laws as may apply. Any revisions, reproductions, modifications, or re-use of these documents without the express written consent of ELEVEN18 Architecture is prohibited by Law.

10 JUL 2023

STATE OF FLORIDA
MATTHEW A. CONTE
AR96819
REGISTERED ARCHITECT

Matt Conte, AIA
FL. REG.#AR96819

ELEVEN 18 ARCHITECTURE
A WOMEN'S BUSINESS ENTERPRISE
FL License: AA26001884

Mailing Address:
424 E. Central Blvd. #542
Orlando, FL 32801
www.eleven18architecture.com

Physical Address:
1011 E. Colonial Dr. #307
Orlando, FL 32803
407-745-5300

© Copyright 2019 ELEVEN18 ARCHITECTURE, PL
All Rights Reserved Worldwide

PROJECT NAME:

STARBUCKS TUSKAWILLA

3645 Aloma Ave.
Oviedo, FL 32765

ELEVEN18 PROJECT LEAD:
Maria Lopez
407-745-5300 Ext. 106
mlopez@eleven18architecture.com

PROJECT TEAM:
Javier Rosas

REVISIONS

#	DATE	DESC.
--	06.26.2023	PERMIT SUBMITTAL
1	07/10/23	COUNTY COMMENTS

A003
LIFE SAFETY PLAN

Tenant shall execute the delivery of possession form in accordance with the Lease or a written acknowledgement of delivery and acceptance if a delivery of possession form is not a part of the Lease.

If on the Scheduled Delivery Date, leased premises and the building of which the leased premises are a part are not in the condition required by the Landlord's Work Documents, and/or if Landlord fails to repair all punch list items at the time and in the manner described in the preceding paragraph, and if, in either case, Tenant elects to accept possession of the leased premises, then, in addition to any remedy provided in the Lease and without limitation thereof, and except as expressly provided to the contrary in the Lease, Tenant is hereby authorized to complete all or any portion of the outstanding Landlord's Work and/or punchlist items necessary to bring the leased premises into the required condition and Landlord shall reimburse Tenant for the actual cost of such work plus an administrative surcharge of fifteen percent (15%) of the amount otherwise due Tenant, to compensate Tenant for its employees' time, within thirty (30) days of receipt of an invoice for such sums. Landlord agrees that the Tenant's and its contractor's determination of the scope of all work that is necessary to bring the leased premises into the required condition is deemed appropriate and the cost thereof plus the surcharge referred to above shall be final and binding on Landlord. If Landlord does not reimburse Tenant as required by this Landlord Workletter then in addition to any remedy provided in the Lease and without limitation thereof, Tenant may offset such sum against the monthly base rent and all other charges payable by Tenant under the Lease until such sum has been fully recouped. Nothing herein shall limit or impair any of Tenant's rights and remedies set forth in the Lease or Landlord's obligations thereunder, including, without limitation, requirements for the condition of the leased premises and the building and the shopping center of which the leased premises are a part and Landlord's obligation to construct and complete all Landlord's Work.

3. Incorporation with Lease
This Landlord Workletter is attached to and forms a part of the Lease and is intended by the Landlord and Tenant to be interpreted in all respects in a manner that is consistent with the terms, conditions and provisions of such Lease. Notwithstanding the foregoing, the express terms, conditions and provisions of the Lease (including, without limitation, those terms, conditions and provisions of the Lease, if any, governing delivery dates and the rights and obligations of the parties in the event that on the Scheduled Delivery Date, the premises are not delivered to Tenant in the required condition) shall control in the event of any conflict or inconsistency between the express terms, conditions and provisions of the Lease and this Landlord Workletter.

DESCRIPTION OF LANDLORD WORK
NEW AND/OR EXISTING CONSTRUCTION

CSI	Scope/Category	Details
014000	Quality Control	Landlord shall provide Tenant with construction status updates through regular weekly progress reports and OxBlue site camera(s). Landlord will secure one (1) 12 Megapixel Cobalt Exterior OxBlue Construction

CSI	Scope/Category	Details
		Camera with Solar panel (optional). Camera shall be located at an agreed upon location where the video feed can maintain visual connectivity w/ landlord related construction. The Landlord shall contact Starbucks national account representative @ OxBlue to initiate rental and delivery. The camera shall be installed and operational within 72 hours of construction mobilization. **Contact:** OxBlue Corporation / 1777 Ellsworth Industrial Blvd. NW / Atlanta, GA 30318 Attn: Jonathan DeBowles 678.528.1077 enterprisesupport@oxblue.com
014100	Regulatory Requirements	Landlord shall be responsible for planning and zoning approval, land entitlements, and all associated impact fees associated with Site improvements. If required by the local jurisdiction, Landlord shall also obtain an outdoor seating permit.
024000	Selective Demolition	Demolish, remove, and legally discard all site and building improvements including but not limited to: **Site:** Sidewalks, paving, site storm drainage, landscaping, partitions, site signage, foundations. **Interior:** Ceilings, floor coverings (including adhesive and mastics), interior partitions, fixtures, furniture, equipment, lighting, electrical conduit back to main distribution panel, HVAC duct work, sensors, plumbing. **Plumbing:** Scope lines and hydro flush sewer system to lateral termination at city lines. **Surface Prep:** Prepare impacted areas and surfaces to a condition ready to receive Tenant's construction. Interior spaces shall be left in a "broom clean" condition. **Existing Items:** Tenant shall identify any real and personal property items to remain and be protected prior to demolition. Landlord shall remove items and store in a temperature-controlled environment for Tenant's future use.
033000	Concrete	**Site Footings:** Landlord shall provide concrete footings with specified anchor bolts for Tenant provided signage and bollards per Tenant provided criteria package. Footing design shall consider bearing capacity of soils, wind loads, weight of signage and all applicable codes. Landlord shall coordinate anchor bolt placements, footing locations, and electrical/data stub-ups with Tenant provided cut sheets. Landlord

CSI	Scope/Category	Details
		shall install the following footings and tenants specified bollards in approved locations: 1. Tenant's dedicated monument sign(s) and/or pylon sign 2. 6" diameter steel pipe bollards 3. Pre-menu board 4. Order menu board 5. Drive thru order screen canopy 6. Directional signage two [2] minimum per store 7. Clearance/height restriction bar
033001	Building Subfloor	**General:** Landlord to provide full slab leave out for future Tenant construction. **Subgrade Prep:** Subgrade shall be clean, structural grade fill made level and compacted in accordance with Landlord's geotechnical report. Provide fill 4" below proposed finish floor elevation.
221113	Water Distribution	**General:** Permit, furnish, install at rear of Tenant's space isolated from electrical equipment a minimum: *One [1] 2" independent domestic water meter, designated for Tenant's use, with shut-off valves on either side and bypass valving for maintenance. Provide one [1] 2" copper domestic water line stubbed into the Premises. Location to be designated by Tenant. *One [1] certified & tested backflow preventer with protective enclosure and shut-off ball valve. Backflow prevention assembly shall provide maximum water pressure drop of 15 psig (pounds per square inch gauge). Preferred location is adjacent to the water filtration system in the Back of House (BOH). **Water Pressure:** Water service pressure should be a minimum of 50 psi (345 kPa) and no greater than 65 psi (448 kPa) residual pressure at the location where the water service enters the project space. **Booster Pump:** If the pressure is under 50 psi (345kPa) at point of entrance to Starbucks space, provide a domestic water booster pump and surge tank to meet Starbucks minimum requirements. The Landlord's engineer shall verify the inlet water pressure for each piece of equipment within the store. Locate booster pump above BOH ceiling adjacent to water filtration equipment. **Temporary Service:** If permanent utility service is not available at the

CSI	Scope/Category	Details
		scheduled delivery date as defined in the Lease, temporary service must be provided by Landlord.
221319	Grease Abatement	**General:** The Landlord shall utilize Starbucks National Purchasing Program for procurement and to assist with specifying an approved unit. The tenant's approved FOG interceptor manufacturer is Schier. Should any agency feel that it is necessary for a Starbucks store to install a Fats Oils and Grease (FOG) control system, Starbucks will provide the Landlord with the information required to specify an approved device. **Approach:** The Landlord shall install a Large HGI or gravity fed interceptor with connection to all sinks and/or floor drains as approved by the authority having jurisdiction. Tenants' preferred location is outside the building below grade, adjacent to BOH service door, and/or isolated from building entry and patio area. If a decision is made to challenge jurisdictional requirements, the Landlord will work with Schier's national account leads to interface with the authority having jurisdiction, and gain approval of an appropriately sized device. **Documentation:** When utilizing Starbucks National Purchasing Program, a photograph of the Schier interceptor label with model number and serial number clearly visible must be provided to the Tenant.
321200	Site Paving	**General:** Landlord shall be responsible for vehicular paving on the premises including drive-thru lanes, parking, and drive aisles. Landlord shall prepare subsurface soils, backfill sub-base, and properly compact per the jurisdictionally approved civil engineering plans. **Trash Enclosure:** Provide 6" thick sealed concrete paving at trash enclosure. Extend concrete wear apron 12'-0" from front edge of enclosure toward hauler access point. **Asphalt Paving:** Landlord shall provide asphalt paving throughout parking area. A licensed engineer shall appropriately specify sub-base, aggregate, asphaltic binder, and sealant to apply with applicable codes. **Reinforced Concrete:** Landlord shall provide 6" thick normal weight stained integral black reinforced Concrete paving. Paving shall start 12'-0" prior to Tenant's order point and extend 12'-0" beyond pick-up window. Concrete shall extend width of drive-thru Lane or minimum 12'-0" from edge of curb. A licensed engineer shall appropriately size

CSI	Scope/Category	Details
		form-work, aggregate mix, reinforcement, and control joints in compliance with applicable codes. Finish per Tenant's approval.
321300	Sidewalks & Patios	**Hardscape:** Landlord shall provide sidewalks, curbs, curb cuts, landscape retainage, ramps, and/or stairs as needed to ensure onsite pedestrian and vehicular access. All components shall be code compliant and accessible as required by the local jurisdiction. Sidewalks shall slope away from the building at all points of entry to promote positive drainage; maximum slope of 1/4" per foot. Cast-in-place concrete shall be engineered by a licensed professional per the geotechnical report and in conformance with all applicable codes. **Canopy:** Landlord to provide structural outdoor canopy for covered patio seating. The canopy design shall be integral with the buildings' façade, and approved by Starbucks prior to permitting. The construction shall be permanent and designed to conform with all local and national jurisdictional requirements. **Railing:** Provide patio railing throughout. **Patio Finish:** Colored paver or stamped concrete, sealed, color per Tenant selection.
321700	Pavement Markings & Wayfinding	**Wayfinding:** Provide parking lot pavement markings including: accessible marking, stall striping, pedestrian access signage, and drive thru wayfinding graphics per jurisdictional requirements, and as defined in the Tenant approved site plan. Install site signage including Starbucks dedicated parking signage and accessibility signage as approved by the local jurisdiction. **Wheel Stops:** Provide wheel stops at all parking spaces adjacent to Tenant's sidewalk, patio, and directly next to building.
322000	Trash & Recycling	**Trash Enclosure:** All trash enclosures shall be sufficiently sized to accommodate Tenant's trash, recycling, and composting needs. Landlord shall initiate contact with local service provider to determine service types, Bins which meet the below minimum dimensions, pickup frequency and schedule. **Required Dimensions:** Provide a trash enclosure of a minimal clear size of 18'-0" wide x 9'-0" deep x 7'-0" high, with space inside the enclosure to accommodate a four (4) cubic yard trash container, a four (4) cubic yard recycling container, and two [2] sixty-four (64) gallon containers

CSI	Scope/Category	Details
		for composting materials and all other adequately sized containers required by applicable Trash and Recycling Laws in the Trash and Recycling Area sufficient for the handling of all Trash and Recyclable Materials (the "Bins"). **Bins:** All openings on all Bins shall have a maximum height of 3'-0" from ground level, or if the opening on any Bin is higher than 3'-0" from ground level an appropriate step shall be provided by Landlord so that the opening is 3'-0" or less from the top of the step. **Cladding:** No open chain link enclosures will be allowed and all construction materials and fencing materials shall be approved by Tenant. **Location & Access:** The trash enclosure shall be physically located on the site in a mutually agreed upon location no greater than 300'-0" from the Tenant's service door without interrupting the flow to the drive-thru lane (if applicable) or access to the parking areas or ingress or egress to and from the Premises. **Pathway:** The pathway from the Premises to the enclosure and the enclosure itself shall be well lit. Access pathway from rear door to Tenant's trash area shall be ramped to allow rolling access. **Hose Bib:** Provide a lockable hose bib within the Trash and Recycling Area. If the trash enclosure is closer than 75'-0" from Tenant's rear access door, Tenant can use hose bib adjacent to door.
328000	Irrigation Systems	**Installation:** Landlord shall furnish and install irrigation system in compliance with local regulations. Irrigation system shall be type drip or micro spray with weather and soil moisture sensor and SMRT Logic internet compatible. System design shall maximize delivery of water to plant areas, including planters, while minimizing over-spray, runoff and customer disruption. Controls shall be set to run at optimal times; early morning and evening, to minimize evaporation loss and business hours disruption. **Metering:** Irrigation system shall be separately metered and include an integral backflow prevention device. Vault type control and valves are preferred and must be accessible by Tenant. **Temporary Irrigation System:** If a permanent irrigation system is NOT required due to landscape type then a temporary system should be installed until plants are established. Verification the landscaping does not require an irrigation system must be provided. The prescriptive requirements are defined in the Starbucks Landscaping and Plumbing Design Guidelines and specifications.

CSI	Scope/Category	Details
329300	Landscaping	**Design:** Landscape design must use native and adaptive variety species that are type low maintenance and require minimal to no irrigation. Additional requirements such as salt runoff or drought tolerance shall be considered regionally. Landscape shall minimize rain and irrigation run-off while conserving and utilizing existing vegetation as required. Designs shall include a mixture of trees, shrubs and ground cover to retain soil moisture, mitigate solar heat gain, and enhance the Tenant's customer experience. **Trees:** In no case will the caliper of newly planted trees be less than 2", and stand less than 7'-0" tall. All trees shall be staked minimum one year or until fully established. At no point shall a tree blocking visual access to prominent site features such as storefront windows, entrances, Tenant signage, site wayfinding, or pedestrian access when fully grown. **Turf:** No artificial turf grass is permitted on Tenant's site. **Planters:** All planters should be designed to ensure proper drainage and include an appropriate amount of native topsoil to ensure optimum plant health. Where applicable, provide a minimum 2" of mulch over landscape beds to retain soil moisture and minimize weed growth. **Maintenance:** Any landscaping designs that require maintenance items after the first year including, but not limited to, removal of planter stakes and temporary irrigation, must be scheduled at completion of landscaping work.
333100	Sanitary Sewer	**General:** Permit, furnish, and install at rear of Tenant's space, a 4" sanitary sewer waste line dedicated for Tenant's use. The invert elevation at the furthest point of connection shall be 27" below finished floor and maintain a minimum slope of 0-1/4" per lineal foot. Landlord shall hydro flush and video scope Tenant's sewer lateral to connection with city sewer main.
0334100	Storm Water Management	**System:** Provide a subsurface stormwater retention system to accommodate Tenant's building configuration, site circulation, patio, site amenities, and jurisdictional requirements as defined in the Landlord's approved site plan. **Downspouts:** Coordinate location of roof and canopy downspouts with Landlord's approved site plan. No direct discharge to sidewalks, drive aisles, patio, or parking lot are permitted.
335100	Gas Distribution	N/A

NOTES

LANDLORD WORK LETTERS/EXHIBITS ARE PROVIDED FOR INFORMATION AND TO BE CONSIDERED A PART OF THE CONTRACT DOCUMENTS FOR CONSTRUCTION. THE CONTRACTOR SHALL BECOME FULLY AWARE OF THE REQUIREMENTS OF THE WORK LETTERS. IF THERE IS A DISCREPANCY BETWEEN THE DRAWINGS AND THE WORK LETTERS, THE WORK LETTERS TAKE PRECEDENCE. ADVISE THE OWNER OF ANY DISCREPANCY PRIOR TO PROCEEDING WITH WORK. CONFIRM THE SCOPE AND REQUIREMENTS OF THE WORK LETTER WITH THE OWNER AND ADDITIONALLY CONFIRM THE LETTERS INCLUDED HEREIN ARE CURRENT AND ACCURATE

COPYRIGHT STATEMENT
These documents, their contents, and the ideas, designs, and concepts presented here-in are the property of ELEVEN18 Architecture and are issued only for the specific project noted on these documents. Holders of these documents that have established a mutually agreed contractual relationship with ELEVEN18 Architecture have been granted a limited license to reproduce these documents in relationship to the specific project referenced. All others are subject to US Copyright Law as defined by Title 17 of the United States Code and other regional laws as may apply. Any revisions, reproductions, modifications, or re-use of these documents without the express written consent of ELEVEN18 Architecture is prohibited by Law.

10 JUL 2023

STATE OF FLORIDA
MATTHEW A CONTE
AR96819
REGISTERED ARCHITECT

Matt Conte, AIA
FL. REG.#AR96819

ELEVEN 18 ARCHITECTURE
A WOMEN'S BUSINESS ENTERPRISE
FL License: AA26001884

Mailing Address:
424 E. Central Blvd. #542
Orlando, FL 32801
www.eleven18architecture.com

Physical Address:
1011 E. Colonial Dr. #307
Orlando, FL 32803
407-745-5300

© Copyright 2019 ELEVEN18 ARCHITECTURE, PL
All Rights Reserved Worldwide

PROJECT NAME:

STARBUCKS
TUSKAWILLA
3645 Aloma Ave.
Oviedo, FL 32765

ELEVEN18 PROJECT LEAD:
Maria Lopez
407-745-5300 Ext. 106
mlopez@eleven18architecture.com

PROJECT TEAM:
Javier Rosas

REVISIONS

#	DATE	DESC.
--	06.26.2023	PERMIT SUBMITTAL

A004
WORK LETTER

CSI	Scope/Category	Details
073000	Roof Assembly	**General:** Landlord shall provide fully adhered or mechanically fastened 60 Mils (nominal thickness) EPDM or TPO roofing system. System shall conform with applicable federal, state, provincial, and local building codes, and be engineered to satisfy site specific structural, fire, and thermal requirements. Insulation shall be minimum R-38 or comply with the minimum prescriptive values outlined in the IECC (International Energy Conservation Code). System shall include underlayment, rigid board insulation, glass mat cover board, sheet flashing, edge sealants, saddles, corners, and vent flashing. **Structure:** Roof Structure shall be designed in conformance with local codes and engineered to resist uplift, live, and dead loads requirements. In addition, structure shall be sized to support Tenant's RTUs, utility fan, and remote condenser (if applicable, in locations to be coordinated with Tenant). **Finish:** SRI (Solar Reflectance Index) = 79 minimum **Flexible Walkways:** Install walkway products in locations to permit travel from rooftop access to all utilities. Heat weld to substrate or adhere with compatible adhesives. **Penetrations:** Landlord shall furnish and install rooftop penetrations, curbs, and associated flashings. Size and location of penetrations shall be coordinated with and approved by Tenant prior to installation. Penetrations shall include and not be limited to the following: 1. Plumbing Vents - Extend 12" into building for Tenant's tie-in 2. Water Heater B-Vent 3. Utility Set Fan Curb 4. RTU Curbs 5. Electrical and Gas penetration for RTU's (home run elec. conduit back to tenants distribution panel) 6. Electrical Signage penetrations (home run elec. conduit back to tenants distribution panel) 7. Line set penetration for Ice maker (if applicable) 8. Sleepers for condensers (if applicable) **Rooftop Access (Exterior):** Provide aluminum channel exterior rooftop access ladder at rear of building in Tenant approved location. Ladder shall be fixed exterior grade with lockable access. Ladder shall be in compliance with OSHA regulations and conform with local and national

CSI	Scope/Category	Details
		codes. **Drainage:** Landlord shall furnish and install jurisdictionally approved rooftop drainage to tie in with site and/or municipal stormwater management system. Scupper and downspouts shall be minimum .032" thickness formed and coated aluminum, color to match adjacent finish. Coordinate scupper/downspouts with exterior building elements and Tenant provided signage.
084000	Exterior Openings	**General:** Landlord shall furnish and install all exterior doors, frames, windows and/or storefront system in compliance with all local and national codes. Thermal resistance of all openings shall comply with the prescriptive requirement of the IECC (International Energy Conservation Code). **Vestibule:** In Climate Zone 5 and above, Landlord shall furnish and install heated entry vestibule in conformance with the barrier free provisions of the code and applicable energy code requirements. **Steel Doors:** Landlord shall furnish and install up to [2] commercial grade 42" x 84" rear service door(s). Door(s) shall be cold rolled and welded 16 gauge steel with polystyrene core. Frames shall be Double Rabbet fully welded 14 gauge steel. Finish hot dip galvannealed coating with two [2] coats shop prime color similar to finish. **Aluminum Storefront:** Storefront shall be 2" x 4-1/2" extruded aluminum section in conformance with ASTM B221; center set; flush design; thermally broken. Doors shall be heavy duty aluminum/glass type; out swinging with 10" bottom rail. Design and size members and anchorages to withstand wind loads as required by the jurisdictional code, and to resist door pivot and closer reaction forces. Finish shall be anodized; coordinate color with Tenant. Provide hurricane resistant frames and associated anchorage for special wind regions as defined in ASCE 7-05. **Glazing:** Storefront glazing to be clear, non-tinted, non-reflective, double glazed and low-e with U-value complying with the appropriate climatic zone in the IECC (International Energy Conservation Code) or local jurisdictional requirements. Provide impact resistant glazing in hurricane or special wind regions as defined in ASCE 7-05. **Hardware:** Landlord shall furnish and install all exterior door hardware in compliance with federal, state, provincial, and local building, life safety, and accessibility requirements. **Aluminum Storefront:** Weather stripping: Hard-backed poly pile in door and/or frame

CSI	Scope/Category	Details
		Threshold: Extruded aluminum with ribbed surface Sill Sweeps: Brush strip, concealed Pivoting/Hinging: Offset pivot; top and intermediate Closers: Dorma BTS 80 NHO; concealed floor closer; single acting; offset pivot Latches/Strike: Adams-Rite MS1830 with provisions for keyed cylinders on interior face only; mount to bottom rail Keying: All lockset and deadbolts shall be keyed as directed by owner Push/Pulls: Arcadia Radius Push-Pull Set; straight pull option; clear finish Cylinder Guard Transom Decal: ("THIS DOOR TO REMAIN UNLOCKED DURING BUSINESS HOURS") **Exterior Service Door:** Threshold: National Guard - 325 Half Saddle Threshold Securing device: Falcon Lock - C607 7-Pin Core Combination "A" Keyway Securing device: Sur-Lock - I/O 2000L-03IC Auto Locking Door Alarm, IC; No CTR Includes - Mortise Cylinder Closer: Dorma - 8916 Door Closer 8916 AF89P Kickplate: Rockwood - 10" Kickplate Peep Hole: DS-6 Door Spy Door Bell: Nutone - MCV309NWHGL Door Bell Door Stop: Rockwood 473 Door Stop with Hook Miscellaneous: National Guard - 16A Rain Drip Miscellaneous: National Guard - 137NA Weather Strip Regional: Provide fly fan and associated power per jurisdictional requirements **Finishes:** General: US26D, Satin Chrome Plated, except: Push Plates, Door Pulls, Kickplates: US32D, Satin Stainless Steel Door Closers: 689/Sprayed Aluminum
085000	Drive Thru Window	**General:** Landlord shall furnish and install fully operational Ready AccessTM Series 600 MOER drive-thru service window. Include transom, sidelights, heater and/or air curtain as required per local code. Window and air curtain finish to match adjacent storefront. Select

CSI	Scope/Category	Details
		window based on Tenant provided criteria and geographic location of store. Coordinate window configuration (right to left or left to right) with Tenant. **Electrical:** Install Electrical for Drive thru window and fly fan per manufacturer's specifications. **Heated Air Curtain:** Install one [1] dedicated 40 amp 208/240 single phase circuit for heated air curtain system per manufacturer's specifications. **Window Shelf:** Install service window shelf at 36" AFF inside and 42" outside as measured above drive-thru surface. Finish shall be exterior grade, durable, no reflective surface per Tenant's approval. Example: Paperstone, Corian or equal
092000	Wall Assembly	**General:** Landlord shall provide exterior masonry wall construction and interior Gypsum Wallboard (GWB) demising walls. System shall be designed to resist dead and live loads, based on jurisdictional requirements. **Insulation:** Provide continuous wall insulation from floor to deck in sufficient thickness to meet the minimum resistance of R-21 or R13+R6.5ci (continuous insulation). In cold weather zones, provide additional insulation as required to meet the prescriptive envelope requirements of the IECC. **Blocking:** Landlord shall provide wall anchorage for all exterior Tenant furnished items. Design anchorage to resist vertical and lateral loads, with a safety factor of 2. **Gypsum Wallboard (GWB):** Landlord shall provide GWB on interior face of exterior masonry walls. Provide 6" interior furring and GWB on all exposed masonry walls. Furnish boards of maximum permissible length, with tapered edge for boards to be exposed, taped, and finished; min. 0-5/8" thick. Install per GA216 and requirements for each fire assembly. Coordinate all rough-in wall conduits, plumbing, and blocking with Tenant prior to installation of GWB. Provide interior furring and GWB on all exposed masonry walls. Interior walls shall be Level 4 finish primed white. **Penetrations:** Wall penetrations for Tenant provided fixtures, including but not limited to; building signage, sconce lighting, exterior speakers, exterior outlets, and frost-proof hose bibs shall be provided by the landlord. Penetration locations shall be coordinated with Tenant prior to installation and shall be properly waterproofed and flashed. Junction

CSI	Scope/Category	Details
		boxes with conduits and pull string shall be stubbed into Tenant's space for future connectivity.
095000	Ceiling Assembly	**General:** Landlord shall deliver Tenant's space with ceiling open to structure. Ceiling assembly shall meet the hourly fire ratings approved by the local jurisdiction having authority. Ceiling assembly; including fireproofing, insulation, wood, concrete, or metal structure, shall be prepped and primed to receive Tenant's future finish. Landlord shall coordinate height to bottom of structure with Tenant, and shall include adequate spacing for ceiling finishes, lighting, HVAC, and fire sprinkler system (if applicable).
107000	Site Accessories	**Bike Rack:** Landlord shall install Tenant approved bike rack(s). Install in a mutually agreed upon location which limits pedestrian disruption and adheres to the barrier free provisions of the code. **Screening:** Landlord shall provide site screening as necessary to reduce noise and light transfer to adjacent sites. **Utility Screening:** Landlord shall provide screen fence per Tenant's Design Criteria at rear of building to screen utility meters and rear access door from drive-thru lane. **Finish:** All screening shall be complementary to building aesthetic and placed in accordance with local jurisdictional requirements and Tenant's Design/Technical Criteria Package and coordinated site plan.
107300	Exterior Canopies	**Metal:** Landlord shall obtain permits, furnish, and install weather protective canopy above all entry and Egress doors at a minimum (9'-0") clear above finish floor. Canopy shall be metal type galvalume minimum 22-gauge steel in conformance with ASTM A792 AZ50. Canopies shall not drain onto pedestrian areas. **Color:** Color and canopy design per Tenant's approval.
107300A	Drive Thru Exterior Canopies	**Drive Thru Canopy:** Landlord shall obtain permits, furnish and install weather protective canopy above Drive-Thru window at a minimum (9'-6") clear above drive through lane. Canopy shall be metal type galvalume minimum 22-gauge steel in conformance with ASTM A792 AZ50. Minimum 5'-0" projection from the building per Tenant's Design Criteria. **Color:** Color and canopy design per Tenant's approval.

CSI	Scope/Category	Details
210000	Fire Protection	**General:** If required by applicable codes; Landlord shall engineer, obtain permits, furnish and install a certified fire sprinkler system in dedicated riser room. Locate fire main in BOH in Tenant approved location. Include flow valve, tamper devices, back flow prevention and applicable clearances as required by the authority having jurisdiction. System shall be fully operational and connect to Landlord provided fire alarm system. **Installation:** Landlord shall coordinate installation of sprinkler system with Tenant provided plans. Uprights, side wall, pendant, and concealed heads shall be fully coordinated with Tenant's interior layout plans and conform with all applicable codes. Sprinkler installation shall be coordinated with Tenant's GC to ensure system is inspected, certified, and fully operational prior to Tenant's occupancy.
224200	Plumbing Fixtures & Equipment	**Plumbing Vents:** Furnish, engineer, and install all plumbing vents required for tenant's future construction. Vents shall be properly sized based on tenant's future fixture unit count. Landlord shall properly flash roof penetration and extend pipe to terminate in the ceiling above tenant's space. **Hose Bibs:** Provide (2) lockable recessed frost-free bibs, located adjacent to tenants BOH entry and patio area. Final location shall be coordinated with tenant's plans prior to installation. Hose bibs shall be connected to a 0-½" insulated copper pipe, run through wall, and terminated above tenant's space. Leave piping exposed and visible for tenant's future connection. If system is pressurized provide ¼ turn shut off valve. **Metering:** If hose bibs are dedicated to Tenant, Landlord shall run water usage through Tenant's water meter.
233000	HVAC Ductwork	**General:** Landlord shall furnish and install RTU's drop plenum when units are set. Extend supply and return air 3'-0" below ceiling for future Tenant tie-in. Tenant will furnish and install all HVAC duct work throughout space.
233400	Exhaust Fan & Ducting	**Fan:** Furnish and install **rooftop exhaust fan**, associated curb, roofing, flashing, and electrical connection to ensure fully operational system. Size fan based on the following criteria: Exhaust 80 cfm per restroom (min. 2) and 70 cfm per oven (min. 2)

CSI	Scope/Category	Details
237000	HVAC	**Units:** Furnish and install high efficiency HVAC rooftop units [RTUs], including, curbs, structural support and associated electrical, plumbing and, gas connections as required to ensure completely functional system. Tenant's approved manufacturers are Carrier and Trane. Landlord shall utilize Starbucks National HVAC Purchasing Program for unit procurement, per Tenant provided criteria package. **Capacity:** Furnish no less than 1 ton of cooling capacity per 125 SF. Furnish heating capacity per engineered calculations specific to the local climate zone of the site. Tenant prefers minimum two [2] zones of conditioned air distributed between Tenant's BOH and café space. System shall be engineered per ASHRAE 90.1-2013 and in compliance with local energy code (whichever is more stringent). Provide ducted fresh air intake integrated into air handling system in accordance with ASHRAE 62.1-2013. **Accessories:** HVAC units shall include barometric relief and economizers when required by code. HVAC units 7.5 tons and larger with economizers shall have powered exhaust interlocked to operate with economizer. HVAC units with 2000 CFM delivery or greater shall be provided with a duct mounted smoke detector in the return air duct. Units serving café space shall provide Demand Control Ventilation. Plumb all condensation drain lines per local code requirements. **Thermostats:** Landlord shall provide a minimum length of 150'-0" of low voltage thermostat cable for Tenant's future use. Cable shall be looped and left in the ceiling space, wired to units. **Start-Up:** HVAC Unit(s) shall be tested, operable and furnished with minimum MERV 8 filters. Coordinate initial mechanical start-up per manufacturer's recommendation and provide Tenant with documentation of start-up as needed to support Tenant's Commissioning requirements. **Required commissioning documentation includes:** Starbucks Commissioning Photo List, and Starbucks Pre-Functional Checklist (HVAC sections only). Landlord shall provide repair & maintenance documentation including but not limited to unit specifications, operations manual, testing and balancing documentation, serial number and warranty. **Temporary Heating/Cooling:** Provide temporary heating/cooling to the premises if space is not tempered at start of construction or delivery.
260923	Electrical	**Feeders:** Landlord Shall furnish and install; concealed below grade, electrical feeders from utility service point to Tenant's main panel on Premises. Standard electric service shall be **600 amp**, 208Y/120V, 3 phase, 4 wire.

NOTES

LANDLORD WORK LETTERS/EXHIBITS ARE PROVIDED FOR INFORMATION AND TO BE CONSIDERED A PART OF THE CONTRACT DOCUMENTS FOR CONSTRUCTION. THE CONTRACTOR SHALL BECOME FULLY AWARE OF THE REQUIREMENTS OF THE WORK LETTERS. IF THERE IS A DISCREPANCY BETWEEN THE DRAWINGS AND THE WORK LETTERS, THE WORK LETTERS TAKE PRECEDENCE. ADVISE THE OWNER OF ANY DISCREPANCY PRIOR TO PROCEEDING WITH WORK. CONFIRM THE SCOPE AND REQUIREMENTS OF THE WORK LETTER WITH THE OWNER AND ADDITIONALLY CONFIRM THE LETTERS INCLUDED HEREIN ARE CURRENT AND ACCURATE

COPYRIGHT STATEMENT

These documents, their contents, and the ideas, designs, and concepts presented here-in are the property of ELEVEN18 Architecture and are issued only for the specific project noted on these documents. Holders of these documents that have established a mutually agreed contractual relationship with ELEVEN18 Architecture have been granted a limited license to reproduce these documents in relationship to the specific project referenced. All others are subject to US Copyright Law as defined by Title 17 of the United States Code and other regional laws as may apply. Any revisions, reproductions, modifications, or re-use of these documents without the express written consent of ELEVEN18 Architecture is prohibited by Law.

10 JUL 2023

STATE OF FLORIDA
MATTHEW A. CONTE
AR96819
REGISTERED ARCHITECT

Matt Conte, AIA
FL. REG.#AR96819

ELEVEN 18 ARCHITECTURE
A WOMEN'S BUSINESS ENTERPRISE
FL License: AA26001884

Mailing Address:
424 E. Central Blvd. #542
Orlando, FL 32801
www.eleven18architecture.com

Physical Address:
1011 E. Colonial Dr. #307
Orlando, FL 32803
407-745-5300

© Copyright 2019 ELEVEN18 ARCHITECTURE, PL
All Rights Reserved Worldwide

PROJECT NAME:

STARBUCKS
TUSKAWILLA
3645 Aloma Ave.
Oviedo, FL 32765

ELEVEN18 PROJECT LEAD:
Maria Lopez
407-745-5300 Ext. 106
mlopez@eleven18architecture.com

PROJECT TEAM:
Javier Rosas

REVISIONS

#	DATE	DESC.
--	06.26.2023	PERMIT SUBMITTAL

A005
WORK LETTER

CSI	Scope/Category	Details
		Where these electrical service characteristics cannot be met due to site conditions, adjustments shall be made to the electric gear to accommodate the differences in voltage, and/or phase. **Electrical Panels:** Landlord shall furnish and install two electrical panels (Square D or equal) with a minimum of 84 circuit spaces, including breakers per Tenant's construction drawings . Provide sub-feed lugs in one panel for sub-feeding the other panel. Feeder entry shall be concealed in wall through stub-ups. Locate panels in the back of house area adjacent to rear delivery door with 36" (minimum) clearance in front of panels. The tenant main panel shall be 400A/600A main lug only panel. The tenant's sub-panel shall be 225A (minimum) main circuit breaker panel fed by sub-feed lugs in the main panel. Sub-panel shall be capable of accepting multi-pole GFCI circuit breakers up to 50A (as required to comply with NEC 210.8). The sub-panel shall be a series rated system between the main circuit breaker and the branch breakers within the panel to allow for 10kAIC rated breakers to be utilized. Label the panel as series rated per NEC requirements. Motor load on the sub-panel shall be less than 100A. **Metering:** Landlord shall provide **metered** service and disconnect for Tenant's use only. Starbucks service shall be metered; as required by local utility company and capable of recording instantaneous kilowatts, kilowatt-hours, and peak demand. The preferred location for the meter is on the exterior of the building adjacent to the delivery door, hidden from public view. **Transformer:** Landlord shall provide a step-down transformer when site conditions dictate an alternate service. The transformer shall be dry-type with minimum Class 155 insulation and shall meet the Department of Energy (DOE) requirements for efficiency. Step-down transformer shall be located at rear of building, mounted on a concrete pad in an area not to conflict with Tenant's drive thru (if applicable) and shielded from customer view. **Temporary Power:** If permanent electrical service is not available on the delivery date as defined in the lease, temporary service shall be provided by the Landlord. Provide service required for construction operations, with branch wiring and distribution boxes located to allow service and lighting by means of construction-type power cords. Landlord shall provide additional temporary lighting for construction operations.

Tenant Date/Initials: _____/_____
Landlord Date/Initials: _____/_____

CSI	Scope/Category	Details
		door. Actuator and bollard placement shall conform with the barrier free provisions of local and national codes. Conduit, pull string, and wiring shall be run through store front jamb or wall assembly, and terminate in header above entry door.
265600	Site Lighting	**Infrastructure:** Landlord shall provide exterior lighting, conduit, wiring, footings, poles, and fixtures necessary to ensure site illumination meets minimum lighting levels as outlined below. The lighting design shall satisfy all local jurisdictional requirements including site specific regulations such as dark sky ordinances. **Performance:** Exterior lighting shall meet the following foot-candle requirements: **Minimum Illumination Requirements:** 1. Signage: Locate to maximize visibility, provide illumination 750 cd/m2 at signage plane 2. Site entry: Provide 15-20 fc 3. Drive Thru Entry: Provide 15 fc at entry and 20 fc at window (if applicable) 4. Building Entry: Provide 20-25 fc average 5. Patio: Provide 15 fc average 6. Parking & Sidewalks: Provide 1.5 - 2.0 fc minimum 7. Service Door: Provide 5 fc average **Energy Usage:** Exterior lighting shall meet the following maximum energy usage requirements per (ASHRAE 90.1-2007) **Fixtures:** Fixtures shall be type LED, 3000k - 4000k 90+ CRI, fully sealed, aluminum fixtures with shielded luminaire. Pole lighting shall be in scale with Tenant's cafe, and never taller than the building. Lighting shall be held away from the building facade, fenestration, and entry to mitigate unwanted glare. Pole lighting shall be minimal in appearance, simple, modern, and non-obtrusive. Fixtures shall be anodized aluminum, single and twin pole luminaires with asymmetrical wide-spread distribution and adjustable reflectors. Provide 10'-0" to 12'-0" height (pedestrian scale) pole lighting at sidewalks and parking areas adjacent to building. Provide 18'-0" to 22'-0" height (tall) parking lot lighting at adequate spacing to ensure security lighting for parking field. **Controls:** Any exterior building lighting dedicated to Tenant occupancy shall require controls within Tenant's space.

Tenant Date/Initials: _____/_____
Landlord Date/Initials: _____/_____

CSI	Scope/Category	Details
273300	Site Internet & Voice Systems	**Landlord Initiated Connectivity:** Telecommunication services will be ordered by Starbucks for the space leased however to provide Starbucks with point of feed exhibits and Landlord to coordinate initial installation of communication infrastructure with local telco or broadband provider, including the termination of ONT (Optical Network Termination)fiber and/or broadband node at the minimum point of entry. Landlord to provide electrical connectivity for potential LEC (Local Exchange Carrier) fiber node or broadband router as well as a backboard per local specification for service termination and demarcation point placement. Starbucks will require at least fiber or broadband services with minimum speeds of 50x10 Mbps. In exceptional situations, Starbucks might need access to mount roof antennas. **Distribution:** Provide [2] - 2" conduit pathways with pull strings, [1] for voice cabling, and [1] for internet cabling from LEC (Local Exchange Carrier) and cable MPOE (Minimum Point Of Entry) to Tenant's space. LEC (Local Exchange Carrier) and cable MPOE (Minimum Point Of Entry) may not be co-located. Terminate conduit in Tenant's space at the ceiling above the manager's workstation in the back of house, or as otherwise designated by Tenant. **Service Entry:** Landlord shall provide minimum 4" conduit for service entrance, or size per requirements of local service provider. Provide labeled, end-to-end pull strings in all conduits for future use. **Remote Spaces:** If Tenant's café space is located in multiple spaces, (e.g. kiosk with remote office and/or café with remote storage), Landlord will provide (2) separate 2" conduit paths to allow voice and internet connectivity between detached spaces.
284600	Fire Alarm	**Base System:** If required by applicable code; Landlord shall obtain permits, furnish, and install building monitoring and fire protection system. System shall include audible alarms, visual strobes, duct smoke and heat detectors and actuators as required per applicable codes. **Monitoring:** Central station monitoring, if located in Tenant's space, shall be furnished and installed by Landlord, placed in Tenant's approved location, and in accordance with applicable codes. **Installation:** Landlord shall be responsible for installation of all conduits, boxes, and operable components of alarm system. Phased installation of alarm system (if applicable) shall be coordinated with Tenant's construction schedule. Landlord shall manage commissioning and inspection of alarm system prior to Tenant occupancy. **Modifications:** Modification to base building design, as required to

Tenant Date/Initials: _____/_____
Landlord Date/Initials: _____/_____

CSI	Scope/Category	Details
		coordinate with Tenant's build-out, shall be performed by Landlord and finalized prior to owner's occupancy.
481000	Solar	N/A

Landlord: Hill/Gray Seven LLC
Print Name: _____
Title: _____
Date: _____

Tenant: _____
Print Name: _____
Title: _____
Date: _____

Tenant Date/Initials: _____/_____
Landlord Date/Initials: _____/_____

NOTES

LANDLORD WORK LETTERS/EXHIBITS ARE PROVIDED FOR INFORMATION AND TO BE CONSIDERED A PART OF THE CONTRACT DOCUMENTS FOR CONSTRUCTION. THE CONTRACTOR SHALL BECOME FULLY AWARE OF THE REQUIREMENTS OF THE WORK LETTERS. IF THERE IS A DISCREPANCY BETWEEN THE DRAWINGS AND THE WORK LETTERS, THE WORK LETTERS TAKE PRECEDENCE. ADVISE THE OWNER OF ANY DISCREPANCY PRIOR TO PROCEEDING WITH WORK. CONFIRM THE SCOPE AND REQUIREMENTS OF THE WORK LETTER WITH THE OWNER AND ADDITIONALLY CONFIRM THE LETTERS INCLUDED HEREIN ARE CURRENT AND ACCURATE

COPYRIGHT STATEMENT

These documents, their contents, and the ideas, designs, and concepts presented here-in are the property of ELEVEN18 Architecture and are issued only for the specific project noted on these documents. Holders of these documents that have established a mutually agreed contractual relationship with ELEVEN18 Architecture have been granted a limited license to reproduce these documents in relationship to the specific project referenced. All others are subject to US Copyright Law as defined by Title 17 of the United States Code and other regional laws as may apply. Any revisions, reproductions, modifications, or re-use of these documents without the express written consent of ELEVEN18 Architecture is prohibited by Law.

10 JUL 2023

STATE OF FLORIDA
MATTHEW A CONTE
AR96819
REGISTERED ARCHITECT

Matt Conte, AIA
FL. REG.#AR96819

ELEVEN 18 ARCHITECTURE
A WOMEN'S BUSINESS ENTERPRISE
FL License: AA26000884

Mailing Address:
424 E. Central Blvd. #542
Orlando, FL 32801
www.eleven18architecture.com

Physical Address:
1011 E. Colonial Dr. #307
Orlando, FL 32803
407-745-5300

© Copyright 2019 ELEVEN18 ARCHITECTURE, PL
All Rights Reserved Worldwide

PROJECT NAME:

STARBUCKS
TUSKAWILLA
3645 Aloma Ave.
Oviedo, FL 32765

ELEVEN18 PROJECT LEAD:
Maria Lopez
407-745-5300 Ext. 106
mlopez@eleven18architecture.com

PROJECT TEAM:
Javier Rosas

REVISIONS

#	DATE	DESC.
--	06.26.2023	PERMIT SUBMITTAL

A006
WORK LETTER

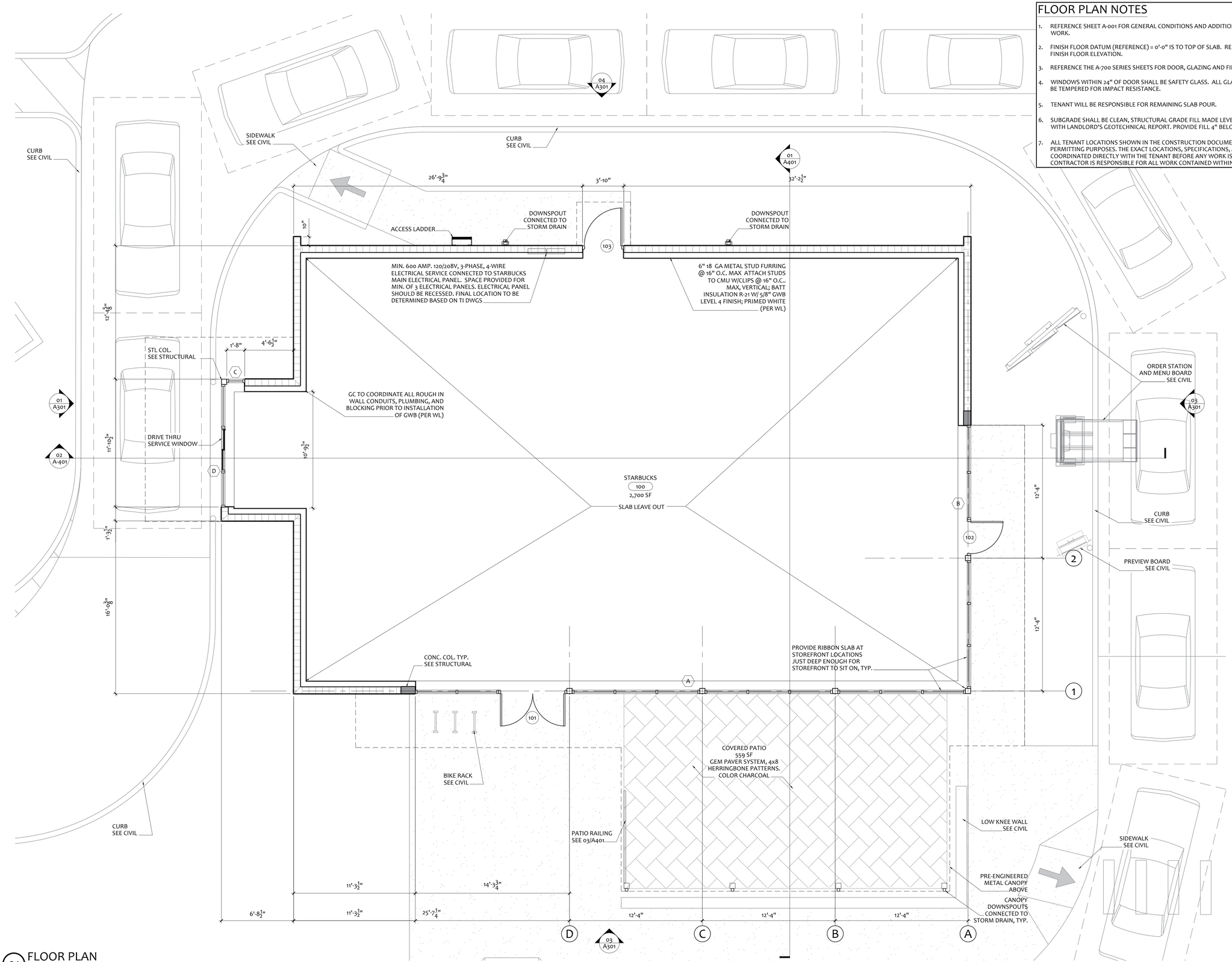

01 FLOOR PLAN
1/4" = 1'-0"

FLOOR PLAN NOTES

1. REFERENCE SHEET A-001 FOR GENERAL CONDITIONS AND ADDITIONAL REQUIREMENTS AFFECTING THIS WORK.
2. FINISH FLOOR DATUM (REFERENCE) = 0'-0" IS TO TOP OF SLAB. REFER TO CIVIL DRAWINGS FOR ACTUAL FINISH FLOOR ELEVATION.
3. REFERENCE THE A-700 SERIES SHEETS FOR DOOR, GLAZING AND FINISH SCHEDULES.
4. WINDOWS WITHIN 24" OF DOOR SHALL BE SAFETY GLASS. ALL GLAZING IN HAZARDOUS LOCATIONS SHALL BE TEMPERED FOR IMPACT RESISTANCE.
5. TENANT WILL BE RESPONSIBLE FOR REMAINING SLAB POUR.
6. SUBGRADE SHALL BE CLEAN, STRUCTURAL GRADE FILL MADE LEVEL AND COMPACTED IN ACCORDANCE WITH LANDLORD'S GEOTECHNICAL REPORT. PROVIDE FILL 4" BELOW PROPOSED FINISH FLOOR ELEVATION.
7. ALL TENANT LOCATIONS SHOWN IN THE CONSTRUCTION DOCUMENTS HAVE BEEN ASSUMED FOR PERMITTING PURPOSES. THE EXACT LOCATIONS, SPECIFICATIONS, AND QUANTITIES WILL NEED TO BE COORDINATED DIRECTLY WITH THE TENANT BEFORE ANY WORK IS COMMENCED. THE GENERAL CONTRACTOR IS RESPONSIBLE FOR ALL WORK CONTAINED WITHIN THE LANDLORD WORK LETTER.

COPYRIGHT STATEMENT

These documents, their contents, and the ideas, designs, and concepts presented here-in are the property of ELEVEN18 Architecture and are issued only for the specific project noted on these documents. Holders of these documents that have established a mutually agreed contractual relationship with ELEVEN18 Architecture have been granted a limited license to reproduce these documents in relationship to the specific project referenced. All others are subject to US Copyright Law as defined by Title 17 of the United States Code and other regional laws as may apply. Any revisions, reproductions, modifications, or re-use of these documents without the express written consent of ELEVEN18 Architecture is prohibited by Law.

10 JUL 2023

STATE OF FLORIDA
MATTHEW A. CONTE
AR96819
REGISTERED ARCHITECT

Matt Conte, AIA
FL. REG.#AR96819

ELEVEN 18 ARCHITECTURE
A WOMEN'S BUSINESS ENTERPRISE
FL License: AA26001884

Mailing Address:
424 E. Central Blvd. #542
Orlando, FL 32801
www.eleven18architecture.com

Physical Address:
101 E. Colonial Dr. #307
Orlando, FL 32803
407-745-5300

© Copyright 2019 ELEVEN18 ARCHITECTURE, PL
All Rights Reserved Worldwide

PROJECT NAME:

STARBUCKS
TUSKAWILLA
3645 Aloma Ave.
Oviedo, FL 32765

ELEVEN18 PROJECT LEAD:
Maria Lopez
407-745-5300 Ext. 106
mlopez@eleven18architecture.com

PROJECT TEAM:
Javier Rosas

REVISIONS

#	DATE	DESC.
--	06.26.2023	PERMIT SUBMITTAL

0 2' 8'
1' 4'

NORTH

A201
FIRST FLOOR PLAN

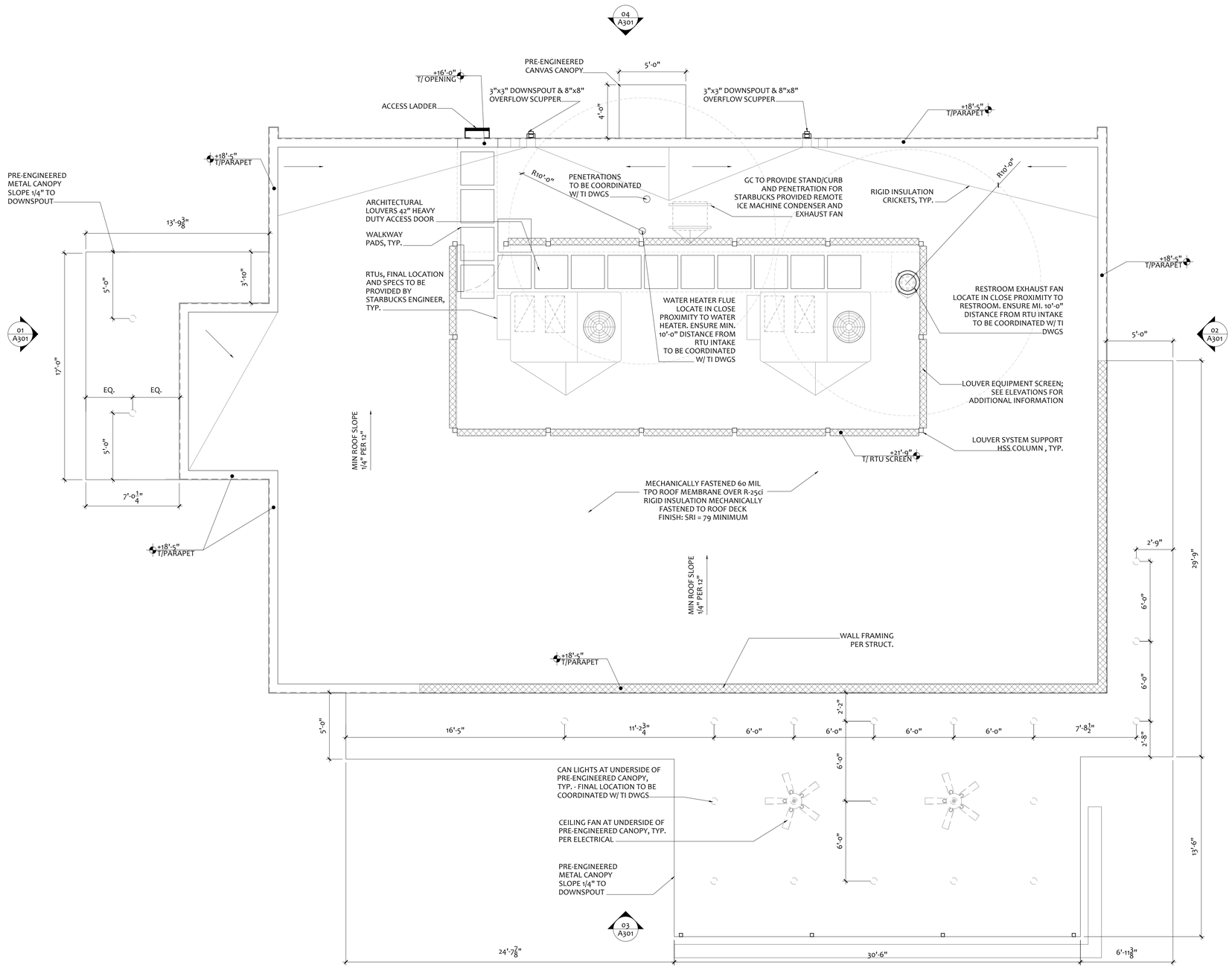

01 ROOF PLAN
1/4" = 1'-0"

ROOF PLAN NOTES

1. REFERENCE SHEET A-001 FOR GENERAL CONDITIONS AND ADDITIONAL REQUIREMENTS AFFECTING THIS WORK.
2. FINISH FLOOR DATUM (REFERENCE) = 0'-0" IS TO TOP OF SLAB. REFER TO CIVIL DRAWINGS FOR ACTUAL FINISH FLOOR ELEVATION.
3. ROOFING SYSTEM(S) SHALL BE DESIGNED, FABRICATED AND INSTALLED TO WITHSTAND WIND SPEED DESIGN IDENTIFIED ON STRUCTURAL DRAWINGS.
4. FURNISH ALL LABOR, MATERIALS AND EQUIPMENT REQUIRED TO INSTALL A COMPLETE ROOFING SYSTEM, COMPLETE WITH ALL ACCESSORIES AND INCIDENTALS REQUIRED BY THE ROOFING MANUFACTURER.
5. INSTALLER SHALL PROVIDE CERTIFICATION FROM ROOFING SYSTEM MANUFACTURER THAT INSTALLER IS APPROVED FOR INSTALLATION OF SPECIFIED ROOFING SYSTEM.
6. CONTRACTOR SHALL PROVIDE MANUFACTURERS STANDARD WARRANTY AGREEING TO PROMPT REPAIR OF LEAKS RESULTING FROM DEFECTIVE MATERIALS OR WORKMANSHIP FOR A PERIOD OF 15 YEARS.
7. LANDLORD SHALL FURNISH AND INSTALL ROOFTOP PENETRATIONS, CURBS, AND ASSOCIATED FLASHINGS. SIZE AND LOCATION OF PENETRATION SHALL BE COORDINATED WITH AND APPROVED BY TENANT PRIOR TO INSTALLATION. PENETRATIONS SHALL INCLUDE AND NOT BE LIMITED TO THE FOLLOWING:
   A. PLUMBING VENTS - EXTEND 12" INTO BUILDING FOR TENANT'S TIE-IN.
   B. WATER HEATER B-VENT.
   C. UTILITY SET FAN CURB.
   D. RTU CURBS.
   E. ELECTRICAL AND GAS PENETRATION FOR RTU'S
   F. ELECTRICAL SIGNAGE PENETRATIONS
   G. LINE SET PENETRATION FOR ICE MAKER
   H. SLEEPERS FOR CONDENSERS (IF APPLICABLE)
8. ENSURE ALL ELECTRICAL, GAS, CONDENSATE AND REFRIGERATION PENETRATIONS ARE PROPERLY SEALED TO MAINTAIN WATER PROOF INTEGRITY OF ROOFING.
9. SCUPPERS AND DOWNSPOUTS SHALL BE MINIMUM .032" THICKNESS FORMED AND COATED ALUMINUM, COLOR TO MATCH ADJACENT FINISH. CONNECT TO SITE STORM DRAIN SYSTEM.
10. ROOF EQUIPMENT FINAL LOCATIONS TO BE COORDINATED WITH TENANT DRAWINGS.
11. INSTALL WALKWAY PADS PRODUCTS IN LOCATIONS TO PERMIT TRAVEL FROM ROOFTOP ACCESS TO ALL UTILITIES. HEAT WELD TO SUBSTRATE OR ADHERE WITH COMPATIBLE ADHESIVES.

1

PERMANENT LADDERS SHALL COMPLY WITH THE FOLLOWING MINIMUM DESIGN CRITERIA:

1. RUNGS SHALL HAVE A DIAMETER NOT LESS THAN 3/4" AND BE CAPABLE OF WITHSTANDING A 300 POUND LOAD.
2. CLIMBING CLEARANCE: THE DISTANCE FROM THE CENTERLINE OF THE RUNGS TO THE NEAREST PERMANENT OBJECT ON THE CLIMBING SIDE OF THE LADDER SHALL NOT BE LESS THAN 30" MEASURED PERPENDICULAR TO THE RUNGS. THIS DISTANCE SHALL BE MAINTAINED FROM THE POINT OF LADDER ACCESS TO THE BOTTOM OF THE ROOF HATCH. A MINIMUM CLEAR WIDTH OF 15" SHALL BE PROVIDED ON BOTH SIDES OF THE LADDER MEASURED FROM THE MIDPOINT OF AND PARALLEL WITH THE RUNGS EXCEPT WHERE CAGES OR WELLS ARE INSTALLED.
3. LANDING REQUIRED: PROVIDE A CLEAR AND UNOBSTRUCTED BOTTOM LANDING AREA HAVING A MINIMUM DIMENSIONS OF 30" X 30" CENTERED IN FRONT OF THE LADDER.
4. LADDERS SHALL BE PROTECTED AGAINST CORROSION BY APPROVED MEANS.
5. ACCESS TO LADDERS SHALL BE PROVIDED AT ALL TIMES.

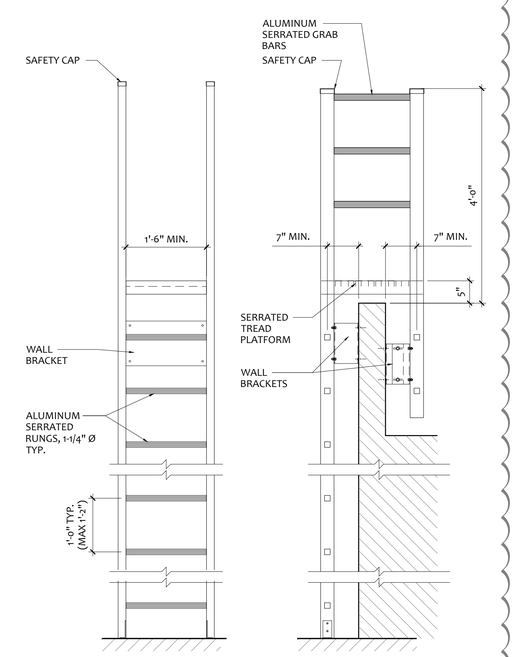

02 LADDER DETAILS
3/4" = 1'-0"

NORTH

COPYRIGHT STATEMENT

These documents, their contents, and the ideas, designs, and concepts presented here-in are the property of ELEVEN18 Architecture and are issued only for the specific project noted on these documents. Holders of these documents that have established a mutually agreed contractual relationship with ELEVEN18 Architecture have been granted a limited license to reproduce these documents in relationship to the specific project referenced. All others are subject to US Copyright Law as defined by Title 17 of the United States Code and other regional laws as may apply. Any revisions, reproductions, modifications, or re-use of these documents without the express written consent of ELEVEN18 Architecture is prohibited by Law.

10 JUL 2023

STATE OF FLORIDA
MATTHEW A. CONTE
AR96819
REGISTERED ARCHITECT

Matt Conte, AIA
FL. REG.#AR96819

ELEVEN 18 ARCHITECTURE
A WOMEN'S BUSINESS ENTERPRISE
FL License: AA26001884

Mailing Address:
424 E. Central Blvd. #542
Orlando, FL 32801
www.eleven18architecture.com

Physical Address:
1011 E. Colonial Dr. #307
Orlando, FL 32803
407-745-5300

© Copyright 2019 ELEVEN18 ARCHITECTURE, PL
All Rights Reserved Worldwide

PROJECT NAME:

STARBUCKS TUSKAWILLA

3645 Aloma Ave.
Oviedo, FL 32765

ELEVEN18 PROJECT LEAD:
Maria Lopez
407-745-5300 Ext. 106
mlopez@eleven18architecture.com

PROJECT TEAM:
Javier Rosas

REVISIONS

#	DATE	DESC.
--	06.26.2023	PERMIT SUBMITTAL
1	07/10/23	COUNTY COMMENTS

A221
ROOF PLAN

ELEVATION NOTES

1. REFERENCE SHEET A-001 FOR GENERAL CONDITIONS AND ADDITIONAL REQUIREMENTS AFFECTING THIS WORK.
2. FINISH FLOOR DATUM (REFERENCE) = 0'-0" IS TO TOP OF SLAB. REFER TO CIVIL DRAWINGS FOR ACTUAL FINISH FLOOR ELEVATION.
3. ALL PRE-MANUFACTURED TRIM, MOULDINGS, CLADDING & COMPONENTS SHALL BE FASTENED & ADHERED TO BUILDING PER MANUFACTURER SPECIFICATIONS TO WITHSTAND DESIGN WIND PRESSURE IDENTIFIED ON STRUCTURAL DRAWINGS.
4. COORDINATE WITH ARCHITECT THE LOCATION OF ALL ADDITIONAL CONTROL JOINTS REQUIRED BUT NOT INDICATED ON PLANS.
5. ALL EXTERIOR SURFACES TO BE PAINTED IN FIELD OR BE PROVIDED WITH FACTORY OR SHOP APPLIED FINISH AS REQUIRED. ALL COLORS SHALL BE SELECTED BY ARCHITECT, APPROVED BY OWNER.
6. COLOR AND CANOPY DESIGN PER TENANT'S APPROVAL. CANOPIES SHALL NOT DRAIN ONTO PEDESTRIAN AREAS.
7. DRIVE THROUGH CANOPY SHALL HAVE A MINIMUM 5'-0" PROJECTION FROM BUILDING PER TENANT'S DESIGN CRITERIA.

ELEVATION FINISH LEGEND

CODE	MATERIAL	MANUFACTURER	DESCRIPTION	
			COLOR	NOTES
SP-1	STUCCO	---	SW 7504 "KEYSTONE GRAY"	
SP-2	STUCCO	---	SW 7026 "GRIFFIN"	
EF-1	EIFS	---	MATCH FLAT BLACK CANOPY/STOREFRONT	
WA-1	WOOD PANEL SYSTEM	NICHIHA AWP 3030	VINTAGE WOOD / BARK	INSTALLED VERTICALLY
MTL-1	METAL COPING	---	PREFINISHED TO MATCH BLACK	
MTL-2	ALUMINUM STOREFRONT SYSTEM	---	BLACK ANODIZED	
MTL-3	HOLLOW METAL FRAME & DOWNSPOUT	---	PAINT SEMI GLOSS BLACK	
MTL-4	PRE-ENGINEERED METAL CANOPY	---	POWDERCOAT TO MATCH FLAT BLACK	METAL TYPE GALVALUME MIN 22GA STEEL
MTL-5	ROOFTOP EQUIPMENT SCREEN	ARCHITECTURAL LOUVERS / V6JF	POWDERCOAT TO MATCH FLAT BLACK	RECTANGULAR UNIT W/ STIFFENERS - INSET MOUNT

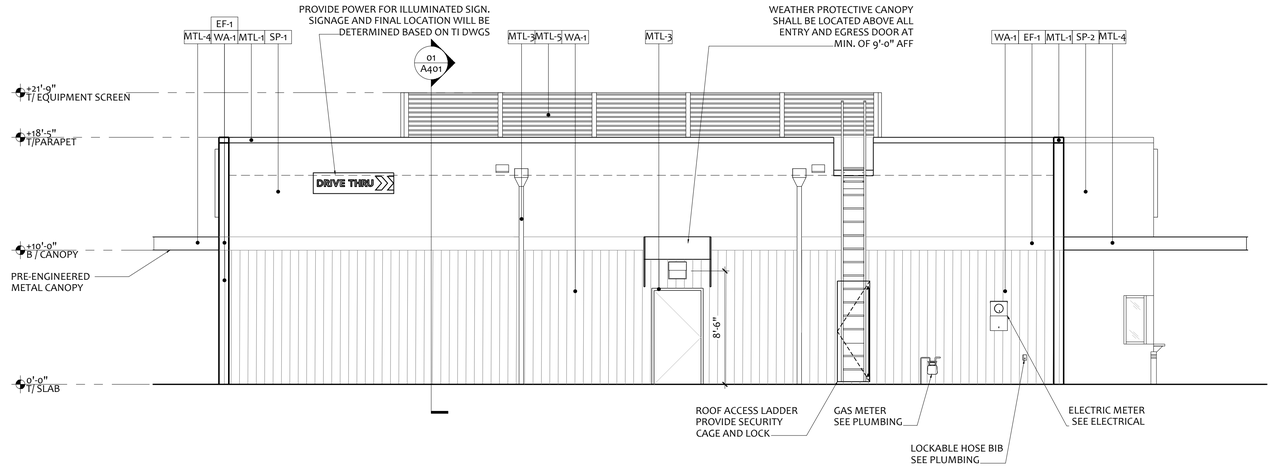

04 WEST ELEVATION
3/16" = 1'-0"

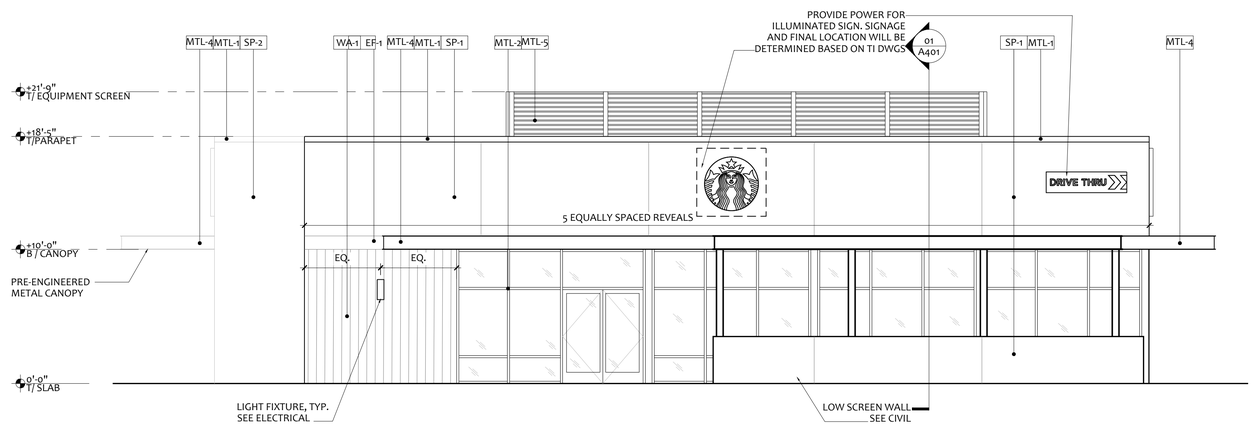

03 EAST ELEVATION
3/16" = 1'-0"

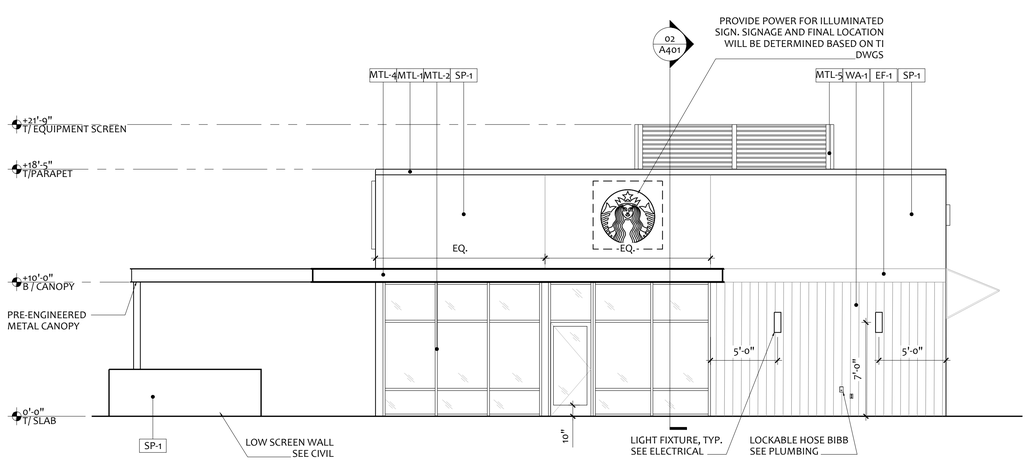

02 NORTH ELEVATION
3/16" = 1'-0"

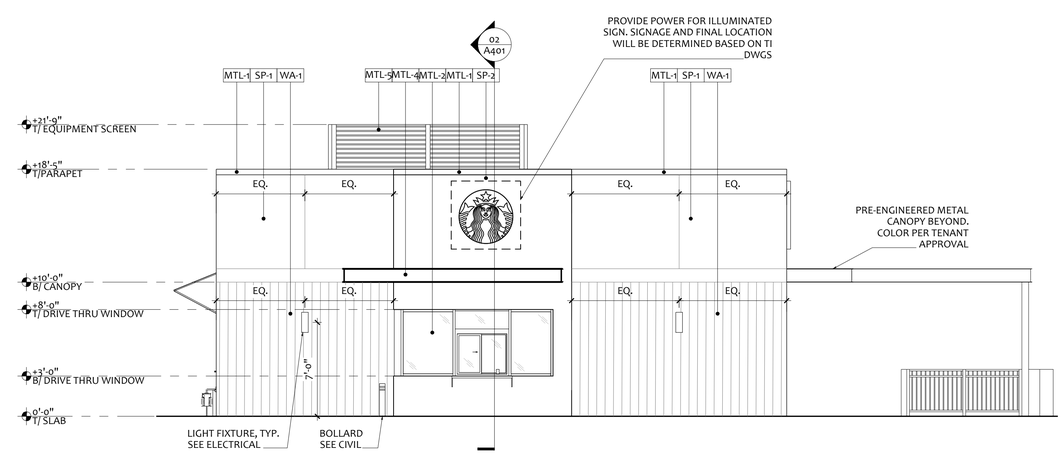

01 SOUTH ELEVATION
3/16" = 1'-0"

COPYRIGHT STATEMENT

These documents, their contents, and the ideas, designs, and concepts presented here-in are the property of ELEVEN18 Architecture and are issued only for the specific project noted on these documents. Holders of these documents that have established a mutually agreed contractual relationship with ELEVEN18 Architecture have been granted a limited license to reproduce these documents in relationship to the specific project referenced. All others are subject to US Copyright Law as defined by Title 17 of the United States Code and other regional laws as may apply. Any revisions, reproductions, modifications, or re-use of these documents without the express written consent of ELEVEN18 Architecture is prohibited by Law.

10 JUL 2023

STATE OF FLORIDA MATTHEW A. CONTE AR96819 REGISTERED ARCHITECT

Matt Conte, AIA
FL. REG.#AR96819

ELEVEN 18 ARCHITECTURE
A WOMEN'S BUSINESS ENTERPRISE
FL License: AA26001884

Mailing Address:
424 E. Central Blvd. #542
Orlando, FL 32801
www.eleven18architecture.com

Physical Address:
1011 E. Colonial Dr. #307
Orlando, FL 32803
407-745-5300

© Copyright 2019 ELEVEN18 ARCHITECTURE, PL
All Rights Reserved Worldwide

PROJECT NAME:

STARBUCKS TUSKAWILLA
3645 Aloma Ave.
Oviedo, FL 32765

ELEVEN18 PROJECT LEAD:
Maria Lopez
407-745-5300 Ext. 106
mlopez@eleven18architecture.com

PROJECT TEAM:
Javier Rosas

REVISIONS

#	DATE	DESC.
--	06.26.2023	PERMIT SUBMITTAL

A301
EXTERIOR ELEVATIONS

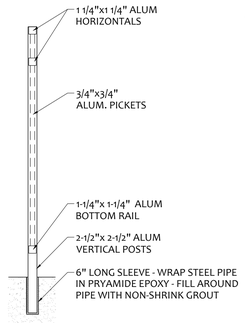

04 HANDRAIL SECTION
1" = 1'-0"

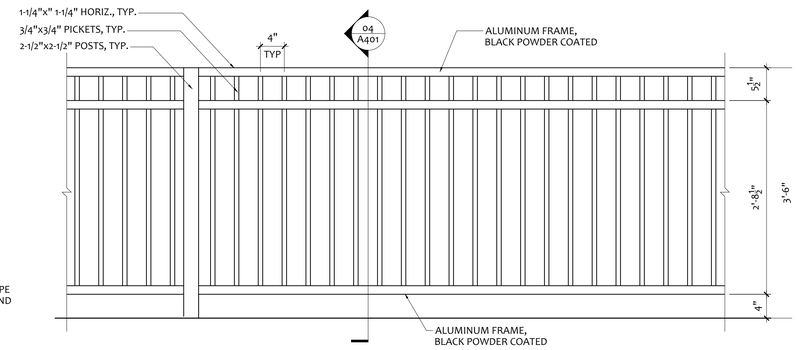

03 HANDRAIL ELEVATION
1" = 1'-0"

BUILDING SECTION NOTES

1. REFERENCE SHEET A-001 FOR GENERAL CONDITIONS AND ADDITIONAL REQUIREMENTS AFFECTING THIS WORK.
2. FINISH FLOOR DATUM (REFERENCE) = 0'-0" IS TO TOP OF SLAB. REFER TO CIVIL DRAWINGS FOR ACTUAL FINISH FLOOR ELEVATION.

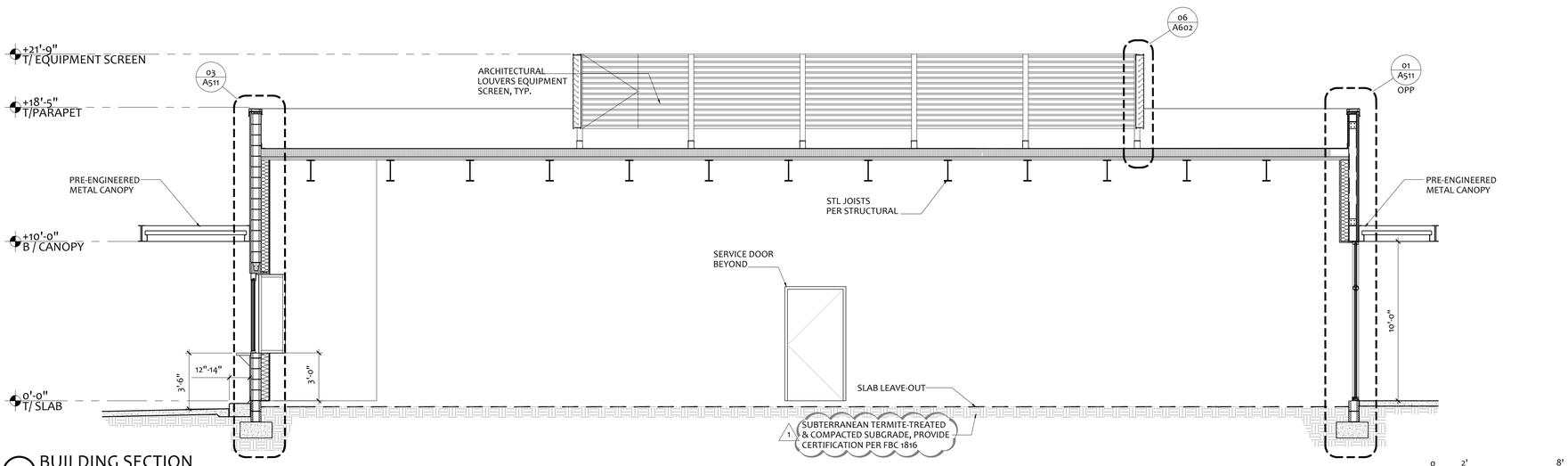

02 BUILDING SECTION
1/4" = 1'-0"

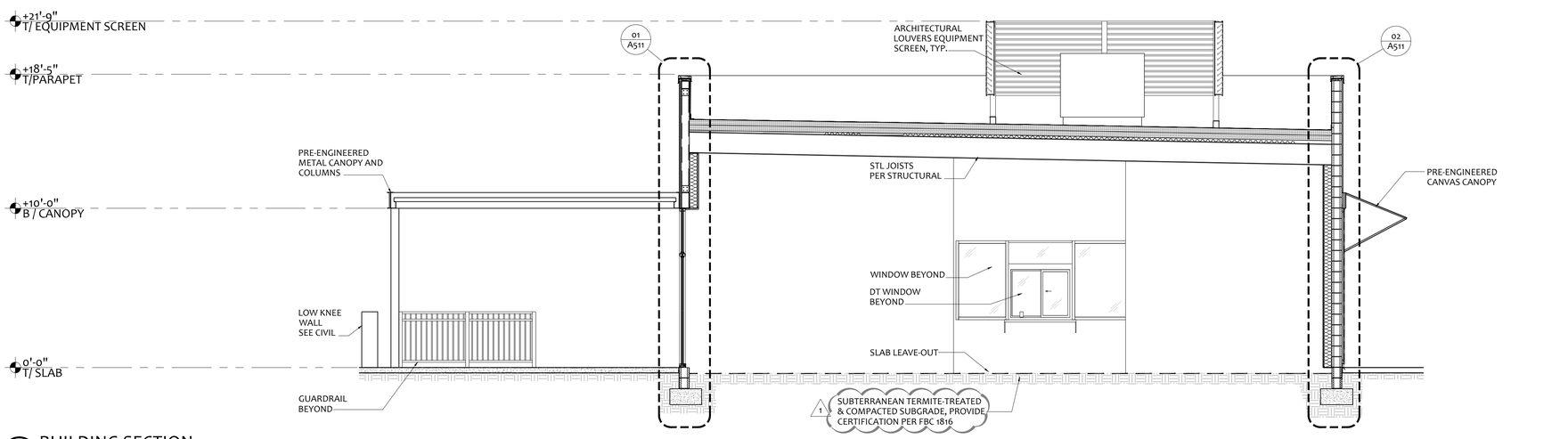

01 BUILDING SECTION
1/4" = 1'-0"

COPYRIGHT STATEMENT

These documents, their contents, and the ideas, designs, and concepts presented here-in are the property of ELEVEN18 Architecture and are issued only for the specific project noted on these documents. Holders of these documents that have established a mutually agreed contractual relationship with ELEVEN18 Architecture have been granted a limited license to reproduce these documents in relationship to the specific project referenced. All others are subject to US Copyright Law as defined by Title 17 of the United States Code and other regional laws as may apply. Any revisions, reproductions, modifications, or re-use of these documents without the express written consent of ELEVEN18 Architecture is prohibited by Law.

10 JUL 2023

STATE OF FLORIDA
MATTHEW A. CONTE
AR96819
REGISTERED ARCHITECT

Matt Conte, AIA
FL. REG.#AR96819

ELEVEN 18 ARCHITECTURE
A WOMEN'S BUSINESS ENTERPRISE
FL License: AA26001884

Mailing Address:
424 E. Central Blvd. #542
Orlando, FL 32801
www.eleven18architecture.com

Physical Address:
1011 E. Colonial Dr. #307
Orlando, FL 32803
407-745-5300

© Copyright 2019 ELEVEN18 ARCHITECTURE, PL
All Rights Reserved Worldwide

PROJECT NAME:

STARBUCKS TUSKAWILLA
3645 Aloma Ave.
Oviedo, FL 32765

ELEVEN18 PROJECT LEAD:
Maria Lopez
407-745-5300 Ext. 106
mlopez@eleven18architecture.com

PROJECT TEAM:
Javier Rosas

REVISIONS

#	DATE	DESC.
--	06.26.2023	PERMIT SUBMITTAL
1	07/10/23	COUNTY COMMENTS

A401

OVERALL BUILDING SECTIONS

WALL SECTION NOTES

1. LANDLORD SHALL PROVIDE GWB ON INTERIOR FACE OF EXTERIOR MASONRY WALLS. PROVIDE 6" INTERIOR FURRING AND GWB ON ALL EXPOSED MASONRY WALLS. FURNISH BOARDS OF MAXIMUM PERMISSIBLE LENGTH, WITH TAPERED EDGE FOR BOARDS TO BE EXPOSED, TAPED, AND FINISHED; MIN. 5/8" THICK. INSTALL PER GA-216. COORDINATE ALL ROUGH-IN WALL CONDUITS, PLUMBING , AND BLOCKING WITH TENANT PRIOR INSTALLATION OF GWB. INTERIOR WALLS SHALL BE LEVEL 4 FINISH PRIMED WHITE.

2. WALL PENETRATIONS FOR TENANT PROVIDED FIXTURES, INCLUDING BUT NOT LIMITED TO, BUILDING SIGNAGE, SCONCE LIGHTING, EXTERIOR SPEAKERS, EXTERIOR OUTLETS, AND FROST-PROOF HOSE BIBS SHALL BE PROVIDED BY THE LANDLORD. PENETRATION LOCATIONS SHALL BE COORDINATED WITH TENANT PRIOR TO INSTALLATION AND SHALL BE PROPERLY WATERPROOFED AND FLASHED. JUNCTION BOXES WITH CONDUITS AND PULL STRING SHALL BE STUBBED INTO TENANT'S SPACE FOR FUTURE CONNECTIVITY.

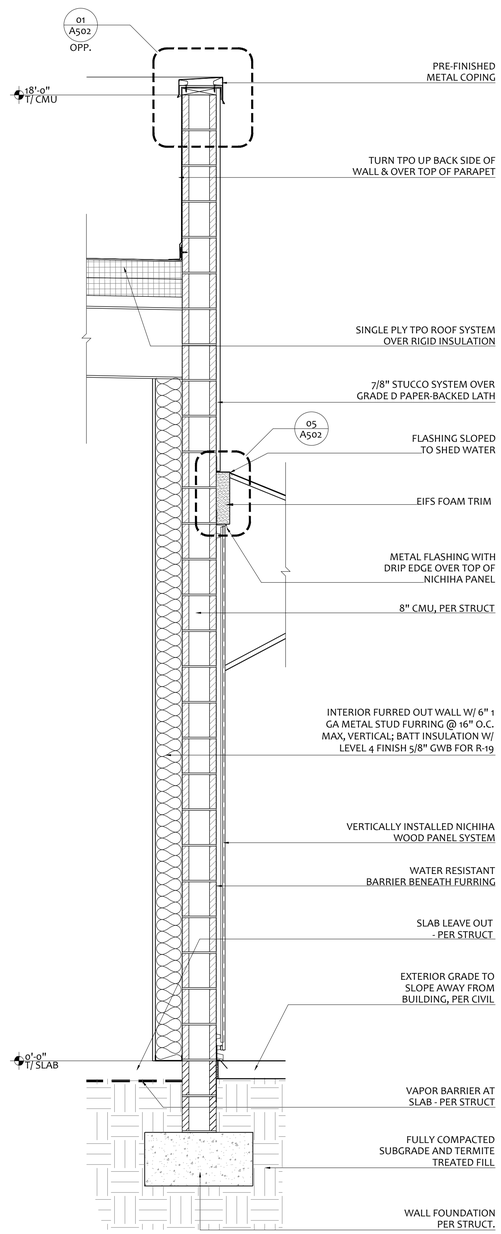

03 WALL SECTION
3/4" = 1'-0"

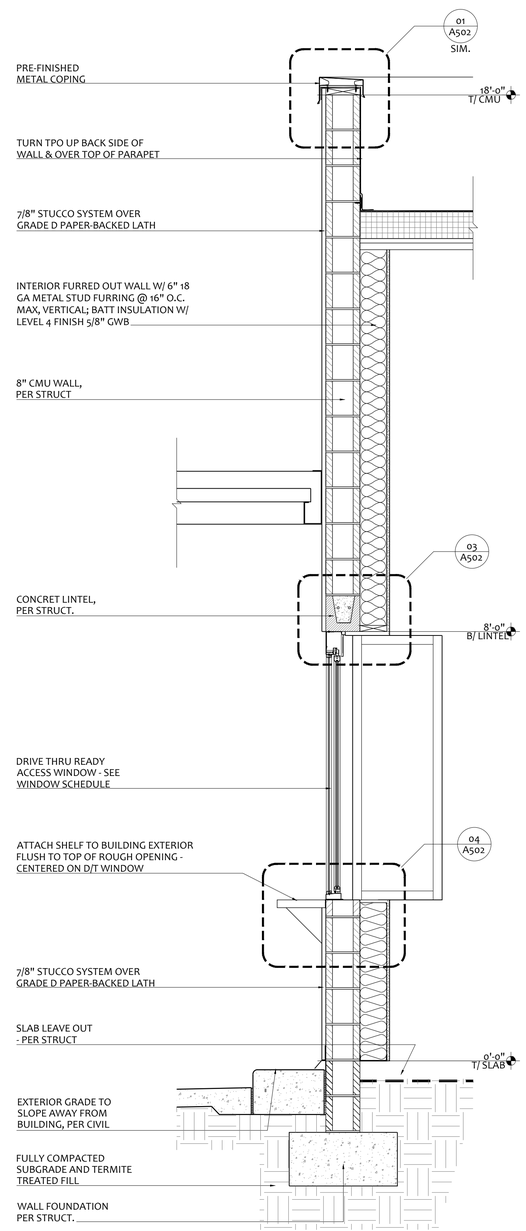

02 WALL SECTION
3/4" = 1'-0"

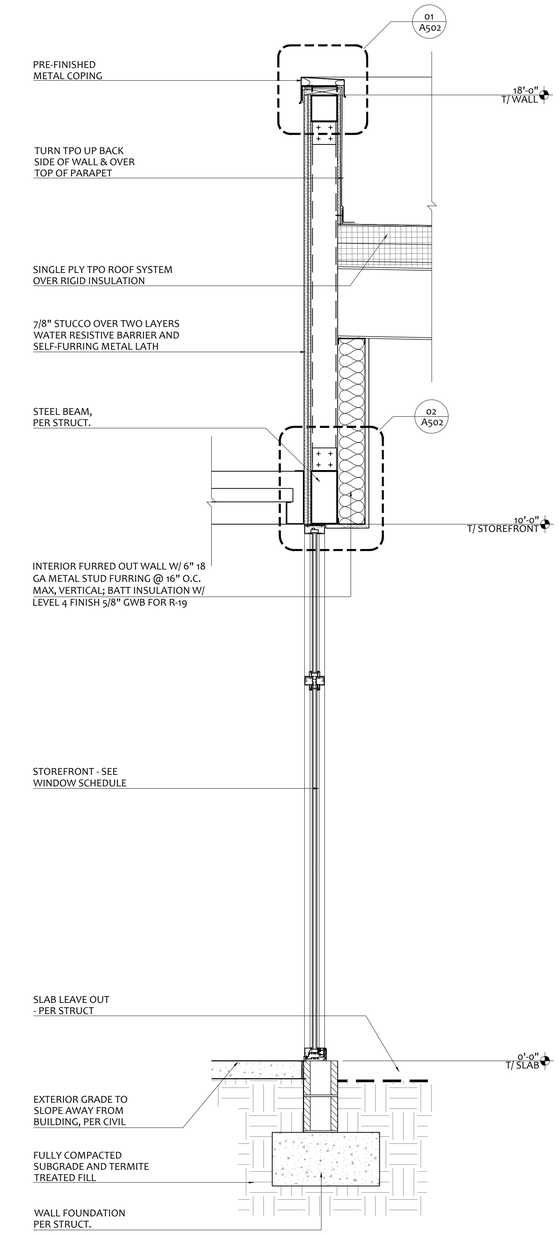

01 WALL SECTION
3/4" = 1'-0"

COPYRIGHT STATEMENT

These documents, their contents, and the ideas, designs, and concepts presented here-in are the property of ELEVEN18 Architecture and are issued only for the specific project noted on these documents. Holders of these documents that have established a mutually agreed contractual relationship with ELEVEN18 Architecture have been granted a limited license to reproduce these documents in relationship to the specific project referenced. All others are subject to US Copyright Law as defined by Title 17 of the United States Code and other regional laws as may apply. Any revisions, reproductions, modifications, or re-use of these documents without the express written consent of ELEVEN18 Architecture is prohibited by Law.

10 JUL 2023

STATE OF FLORIDA
MATTHEW A CONTE
AR96819
REGISTERED ARCHITECT

Matt Conte, AIA
FL. REG.#AR96819

ELEVEN 18 ARCHITECTURE
A WOMEN'S BUSINESS ENTERPRISE
FL License: AA26001884

Mailing Address:
424 E. Central Blvd. #542
Orlando, FL 32801
www.eleven18architecture.com

Physical Address:
101 E. Colonial Dr. #307
Orlando, FL 32803
407-745-5300

© Copyright 2019 ELEVEN18 ARCHITECTURE, PL
All Rights Reserved Worldwide

PROJECT NAME:

STARBUCKS
TUSKAWILLA
3645 Aloma Ave.
Oviedo, FL 32765

ELEVEN18 PROJECT LEAD:
Maria Lopez
407-745-5300 Ext. 106
mlopez@eleven18architecture.com

PROJECT TEAM:
Javier Rosas

REVISIONS

#	DATE	DESC.
--	06.26.2023	PERMIT SUBMITTAL

A511
WALLS SECTIONS

StoPowerwall® ExtraSeal®
Small Pipe Penetration

Detail No.: 65c.70
Date: August 2022
Page 2 of 2

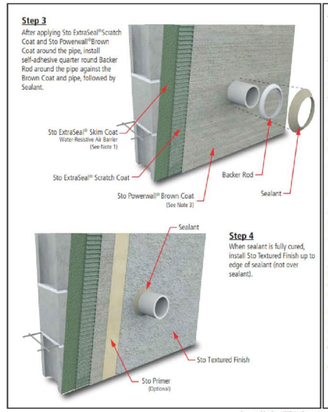

Notes:

1. Refer to StoGuard Product Use Chart (Table 1.1) for StoGuard detail components; joint treatment, rough opening protection, backing for masonry anchors, or transitions to dissimilar materials, joints and seams in construction.

2. Refer to General Notes for specific information and design guidance on wall assembly components.

3. Stucco brown coat material in compliance with ASTM C926 and manufactured or listed by Sto Corp.

4. Consult Spray Foam manufacturer for maximum size of gap for product being used.

5. Refer to applicable Sto guide specifications, product bulletins, Tech Hotlines, and other Sto guide details for additional information.

6. Components not identified as Sto are furnished by other manufacturers and are not necessarily installed by trades who install the Sto products. Refer to project specific contract documents.

ATTENTION

Property of Sto Corp. All Rights Reserved.

www.stocorp.com

StoPowerwall® ExtraSeal®
Small Pipe Penetration

Detail No.: 65c.70
Date: August 2022
Page 1 of 2

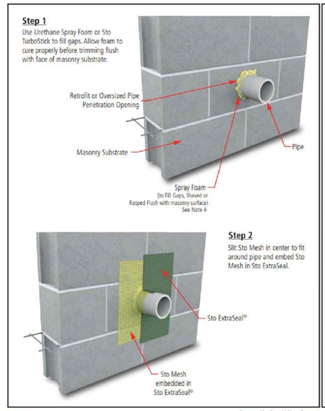

Notes:

1. Refer to StoGuard Product Use Chart (Table 1.1) for StoGuard detail components; joint treatment, rough opening protection, backing for masonry anchors, or transitions to dissimilar materials, joints and seams in construction.

2. Refer to General Notes for specific information and design guidance on wall assembly components.

3. Stucco brown coat material in compliance with ASTM C926 and manufactured or listed by Sto Corp.

4. Consult Spray Foam manufacturer for maximum size of gap for product being used.

5. Refer to applicable Sto guide specifications, product bulletins, Tech Hotlines, and other Sto guide details for additional information.

6. Components not identified as Sto are furnished by other manufacturers and are not necessarily installed by trades who install the Sto products. Refer to project specific contract documents.

ATTENTION

Property of Sto Corp. All Rights Reserved.

www.stocorp.com

StoPowerwall® ExtraSeal®
Parapet - Front

Detail No.: 65c.81
Date: August 2022
Page 1 of 2

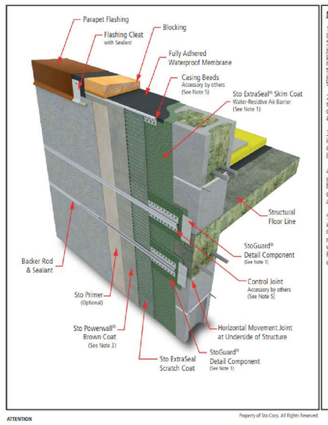

Notes:

1. Refer to StoGuard Product Use Chart (Table 1.1) for StoGuard detail components; joint treatment, rough opening protection, backing for masonry anchors, or transitions to dissimilar materials, joints and seams in construction.

2. Refer to General Notes for specific information and design guidance on wall assembly components.

3. Stucco brown coat material in compliance with ASTM C926 and manufactured or listed by Sto Corp.

4. Refer to applicable Sto guide specifications, product bulletins, Tech Hotlines, and other Sto guide details for additional information.

5. Components not identified as Sto are furnished by other manufacturers and are not necessarily installed by trades who install the Sto products. Refer to project specific contract documents.

ATTENTION

Property of Sto Corp. All Rights Reserved.

www.stocorp.com

StoPowerwall® ExtraSeal®
Unrestrained Joint at Dissimilar Material - Column Interface

Detail No.: 65c.41A
Date: August 2022

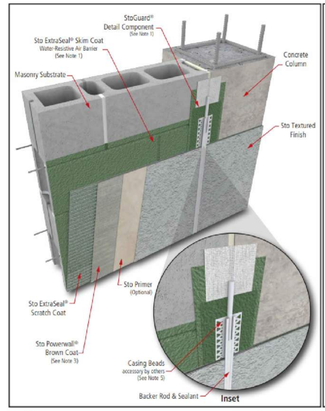

Notes:

1. Refer to StoGuard Product Use Chart (Table 1.1) for StoGuard detail components; joint treatment, rough opening protection, backing for masonry anchors, or transitions to dissimilar materials, joints and seams in construction.

2. Refer to General Notes for specific information and design guidance on wall assembly components.

3. Stucco brown coat material in compliance with ASTM C926 and manufactured or listed by Sto Corp.

4. Refer to applicable Sto guide specifications, product bulletins, Tech Hotlines, and other Sto guide details for additional information.

5. Components not identified as Sto are furnished by other manufacturers and are not necessarily installed by trades who install the Sto products. Refer to project specific contract documents.

ATTENTION

Property of Sto Corp. All Rights Reserved.

www.stocorp.com

StoPowerwall® ExtraSeal®
Rough Opening Protection

Detail No.: 65c.23
Date: August 2022
Page 2 of 2

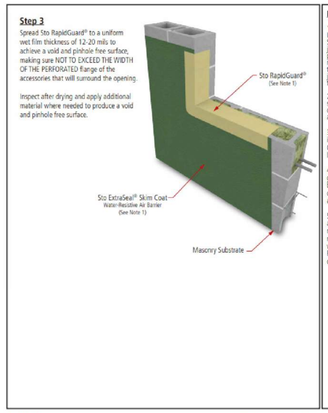

Notes:

1. Refer to StoGuard Product Use Chart (Table 1.1) for StoGuard detail components; joint treatment, rough opening protection, backing for masonry anchors, or transitions to dissimilar materials, joints and seams in construction.

2. Refer to General Notes for specific information and design guidance on wall assembly components.

3. Stucco brown coat material in compliance with ASTM C926 and manufactured or listed by Sto Corp.

4. Refer to applicable Sto guide specifications, product bulletins, Tech Hotlines, and other Sto guide details for additional information.

5. Components not identified as Sto are furnished by other manufacturers and are not necessarily installed by trades who install the Sto products. Refer to project specific contract documents.

ATTENTION

Property of Sto Corp. All Rights Reserved.

www.stocorp.com

StoPowerwall® ExtraSeal®
Rough Opening Protection

Detail No.: 65c.23
Date: August 2022
Page 1 of 2

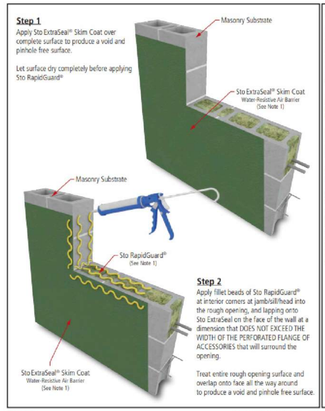

Notes:

1. Refer to StoGuard Product Use Chart (Table 1.1) for StoGuard detail components; joint treatment, rough opening protection, backing for masonry anchors, or transitions to dissimilar materials, joints and seams in construction.

2. Refer to General Notes for specific information and design guidance on wall assembly components.

3. Stucco brown coat material in compliance with ASTM C926 and manufactured or listed by Sto Corp.

4. Refer to applicable Sto guide specifications, product bulletins, Tech Hotlines, and other Sto guide details for additional information.

5. Components not identified as Sto are furnished by other manufacturers and are not necessarily installed by trades who install the Sto products. Refer to project specific contract documents.

ATTENTION

Property of Sto Corp. All Rights Reserved.

www.stocorp.com

StoPowerwall® ExtraSeal®
Box Window - Head

Detail No.: 65c.28
Date: August 2022

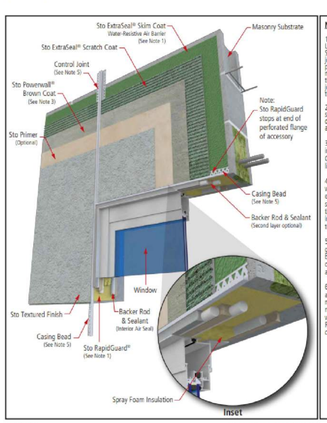

Notes:

1. Refer to StoGuard Product Use Chart (Table 1.1) for StoGuard detail components; joint treatment, rough opening protection, backing for masonry anchors, or transitions to dissimilar materials, joints and seams in construction.

2. Refer to General Notes for specific information and design guidance on wall assembly components.

3. Stucco brown coat material in compliance with ASTM C926 and manufactured or listed by Sto Corp.

4. The complete installation of window or mechanical equipment must include an air seal between the object and the StoGuard protection, inboard of the outer perimeter weather seal.

5. Refer to applicable Sto guide specifications, product bulletins, Tech Hotlines, and other Sto guide dect details for additional information.

6. Components not identified as Sto are furnished by other manufacturers and are not necessarily installed by trades who install the Sto products. Refer to project specific contract documents.

ATTENTION

Property of Sto Corp. All Rights Reserved.

www.stocorp.com

StoPowerwall® ExtraSeal®
Box Window - Jamb and Sill

Detail No.: 65c.27
Date: August 2022

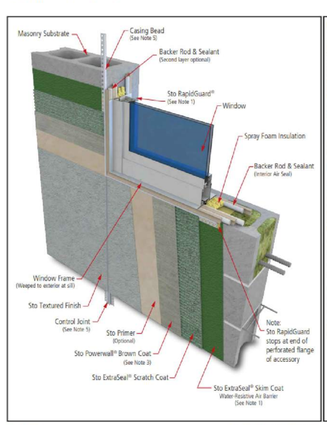

Notes:

1. Refer to StoGuard Product Use Chart (Table 1.1) for StoGuard detail components; joint treatment, rough opening protection, backing for masonry anchors, or transitions to dissimilar materials, joints and seams in construction.

2. Refer to General Notes for specific information and design guidance on wall assembly components.

3. Stucco brown coat material in compliance with ASTM C926 and manufactured or listed by Sto Corp.

4. The complete installation of window or mechanical equipment must include an air seal between the object and the StoGuard protection, inboard of the outer perimeter weather seal.

5. Refer to applicable Sto guide specifications, product bulletins, Tech Hotlines, and other Sto guide details for additional information.

6. Components not identified as Sto are furnished by other manufacturers and are not necessarily installed by trades who install the Sto products. Refer to project specific contract documents.

ATTENTION

Property of Sto Corp. All Rights Reserved.

www.stocorp.com

StoPowerwall® ExtraSeal®
Termination at Grade

Detail No.: 65c.01
Date: August 2022

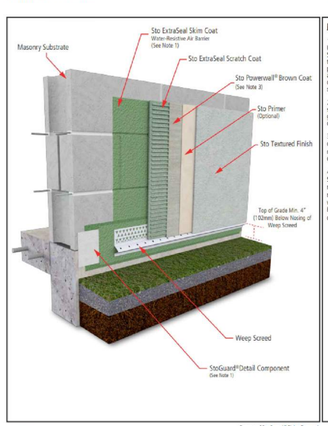

Notes:

1. Refer to StoGuard Product Use Chart (Table 1.1) for StoGuard detail components; joint treatment, rough opening protection, backing for masonry anchors, or transitions to dissimilar materials, joints and seams in construction.

2. Refer to General Notes for specific information and design guidance on wall assembly components.

3. Stucco brown coat material in compliance with ASTM C926 and manufactured or listed by Sto Corp.

4. Components not identified as Sto are furnished by other manufacturers and are not necessarily installed by trades who install the Sto products. Refer to project specific contract documents.

ATTENTION

Property of Sto Corp. All Rights Reserved.

www.stocorp.com

StoPowerwall® ExtraSeal®
System Components

Detail No.: 65c.00
Date: August 2022

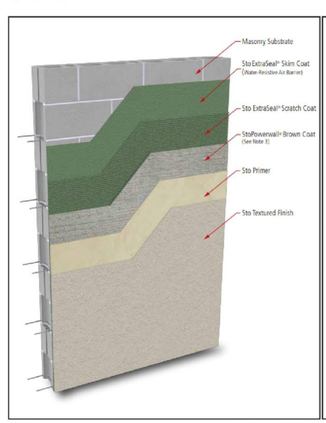

Notes:

1. Refer to StoGuard Product Use Chart (Table 1.1) for StoGuard detail components; joint treatment, rough opening protection, backing for masonry anchors, or transitions to dissimilar materials, joints and seams in construction.

2. Refer to General Notes for specific information and design guidance on wall assembly components.

3. Stucco brown coat material in compliance with ASTM C926 and manufactured or listed by Sto Corp.

4. Refer to applicable Sto guide specifications, product bulletins, Tech Hotlines, and other Sto guide details for additional information.

5. Components not identified as Sto are furnished by other manufacturers and are not necessarily installed by trades who install the Sto products. Refer to project specific contract documents.

ATTENTION

Property of Sto Corp. All Rights Reserved.

www.stocorp.com

COPYRIGHT STATEMENT

These documents, their contents, and the ideas, designs, and concepts presented here-in are the property of ELEVEN18 Architecture and are issued only for the specific project noted on these documents. Holders of these documents that have established a mutually agreed contractual relationship with ELEVEN18 Architecture have been granted a limited license to reproduce these documents in relationship to the specific project referenced. All others are subject to US Copyright Law as defined by Title 17 of the United States Code and other regional laws as may apply. Any revisions, reproductions, modifications, or re-use of these documents without the express written consent of ELEVEN18 Architecture is prohibited by Law.

10 JUL 2023

STATE OF FLORIDA
MATTHEW A. CONTE
AR96819
REGISTERED ARCHITECT

Matt Conte, AIA
FL. REG.#AR96819

ELEVEN 18 ARCHITECTURE
A WOMEN'S BUSINESS ENTERPRISE
FL License: AA26001884

Mailing Address:
424 E. Central Blvd. #542
Orlando, FL 32801
www.eleven18architecture.com

Physical Address:
1011 E. Colonial Dr. #307
Orlando, FL 32803
407-745-5300

© Copyright 2019 ELEVEN18 ARCHITECTURE, PL
All Rights Reserved Worldwide

PROJECT NAME:

STARBUCKS
TUSKAWILLA
3645 Aloma Ave.
Oviedo, FL 32765

ELEVEN18 PROJECT LEAD:
Maria Lopez
407-745-5300 Ext. 106
mlopez@eleven18architecture.com

PROJECT TEAM:
Javier Rosas

REVISIONS

#	DATE	DESC.
--	06.26.2023	PERMIT SUBMITTAL

A601
STO DETAILS

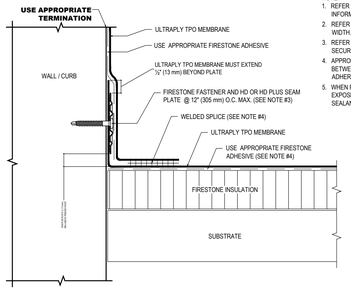

NOTE:
1. REFER TO FIRESTONE WEBSITE FOR MOST CURRENT INFORMATION.
2. REFER TO DETAIL UT-LS-1 OR UT-LS-2 FOR WELD WIDTH.
3. REFER TO UT-BT-16 & UT-BT-17 FOR MEMBRANE SECUREMENT AT CORNERS.
4. APPROPRIATE FIRESTONE ADHESIVE REQUIRED BETWEEN MEMBRANE AND INSULATION FOR ADHERED SYSTEMS.
5. WHEN REINFORCEMENT OF TPO MEMBRANE IS EXPOSED, REFER TO UT-LS-14 FOR CUT EDGE SEALANT APPLICATION.

Firestone Building Products	BASE TIE-IN WITH HD OR HD PLUS SEAM PLATES FASTENED TO WALL OR CURB	MAXIMUM WARRANTY: 20 Years	DETAIL NO.
	ULTRAPLY™ TPO — ACCEPTABLE SYSTEMS: ALL	ISSUE / REVISION DATE: 4/23/2021	UT-BT-2
Firestone Building Products ⏐ Sales: (800) 428-4442 ⏐ Technical: (800) 428-4511 ⏐ www.firestonebpco.com		NOT TO SCALE	

10 TPO BASE DETAIL
1-1/2" = 1'-0"

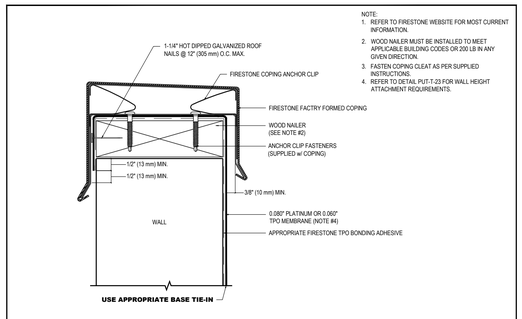

NOTE:
1. REFER TO FIRESTONE WEBSITE FOR MOST CURRENT INFORMATION.
2. WOOD NAILER MUST BE INSTALLED TO MEET APPLICABLE BUILDING CODES OR 200 LB IN ANY GIVEN DIRECTION.
3. FASTEN COPING CLEAT AS PER SUPPLIED INSTRUCTIONS.
4. REFER TO DETAIL PUT-T-23 FOR WALL HEIGHT ATTACHMENT REQUIREMENTS.

Firestone Building Products	TERMINATION AT TOP OF WALL WITH FIRESTONE COPINS	MAXIMUM WARRANTY: 30 Years	DETAIL NO.
	ULTRAPLY™ TPO PLATINUM — ACCEPTABLE SYSTEMS: ALL	ISSUE / REVISION DATE: 4/30/2021	PUT-T-12
Firestone Building Products ⏐ Sales: (800) 428-4442 ⏐ Technical: (800) 428-4511 ⏐ www.firestonebpco.com		NOT TO SCALE	

9 TPO COPING DETAIL
1-1/2" = 1'-0"

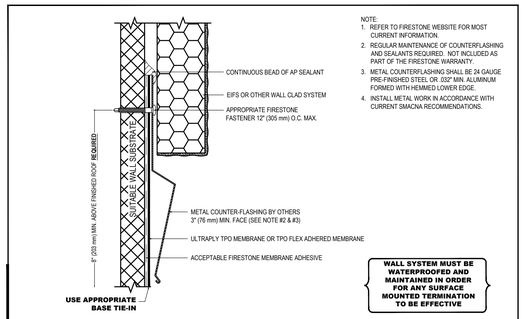

NOTE:
1. REFER TO FIRESTONE WEBSITE FOR MOST CURRENT INFORMATION.
2. REGULAR MAINTENANCE OF COUNTERFLASHING AND SEALANTS REQUIRED. NOT INCLUDED AS PART OF THE FIRESTONE WARRANTY.
3. METAL COUNTERFLASHING SHALL BE 24 GAUGE PRE-FINISHED STEEL OR .032" MIN. ALUMINUM FORMED WITH HEMMED LOWER EDGE.
4. INSTALL METAL WORK IN ACCORDANCE WITH CURRENT SMACNA RECOMMENDATIONS.

Firestone Building Products	TERMINATION AT EIFS OR WALL CLADDING	MAXIMUM WARRANTY: 20 YEARS	DETAIL NO.
	ULTRAPLY™ TPO — ACCEPTABLE SYSTEMS: ALL	ISSUE / REVISION DATE: 12/10/2020	UT-T-7
Firestone Building Products ⏐ Sales: (800) 428-4442 ⏐ Technical: (800) 428-4511 ⏐ www.firestonebpco.com		NOT TO SCALE	

8 TPO TERMINATION DETAIL
1-1/2" = 1'-0"

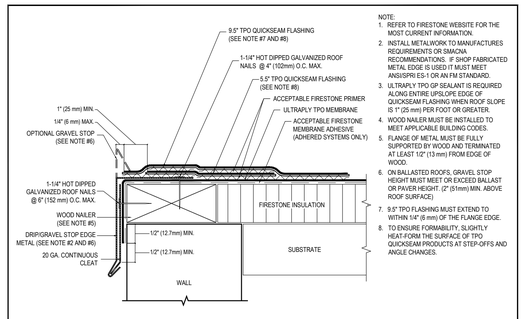

NOTE:
1. REFER TO FIRESTONE WEBSITE FOR THE MOST CURRENT INFORMATION.
2. INSTALL METALWORK TO MANUFACTURES REQUIREMENTS OR SMACNA RECOMMENDATIONS. IF SHOP FABRICATED METAL EDGE IS USED IT MUST MEET ANSI/SPRI ES-1 OR AN FM STANDARD.
3. ULTRAPLY TPO GP SEALANT IS REQUIRED ALONG ENTIRE UPSLOPE EDGE OF QUICKSEAM FLASHING WHEN ROOF SLOPE IS 1" (25 mm) PER FOOT OR GREATER.
4. WOOD NAILER MUST BE INSTALLED TO MEET APPLICABLE BUILDING CODES.
5. FLANGE OF METAL MUST BE FULLY SUPPORTED BY WOOD AND TERMINATED AT LEAST 1/2" (13 mm) FROM EDGE OF WOOD.
6. ON BALLASTED ROOFS, GRAVEL STOP HEIGHT MUST MEET OR EXCEED BALLAST OR PAVER HEIGHT. (2" (51mm) MIN. ABOVE ROOF SURFACE)
7. 9.5" TPO FLASHING MUST EXTEND TO WITHIN 1/4" (6 mm) OF THE FLANGE EDGE.
8. TO ENSURE FORMABILITY, SLIGHTLY HEAT-FORM THE SURFACE OF TPO QUICKSEAM PRODUCTS AT STEP-OFFS AND ANGLE CHANGES.

Firestone Building Products	ROOF EDGE WITH FASCIA METAL BY OTHERS	MAXIMUM WARRANTY: 25 YEARS	DETAIL NO.
	ULTRAPLY™ TPO — ACCEPTABLE SYSTEMS: ALL	ISSUE / REVISION DATE: 6/25/2021	UT-RE-21
Firestone Building Products ⏐ Sales: (800) 428-4442 ⏐ Technical: (800) 428-4511 ⏐ www.firestonebpco.com		NOT TO SCALE	

7 ROOF EDGE DETAIL
1-1/2" = 1'-0"

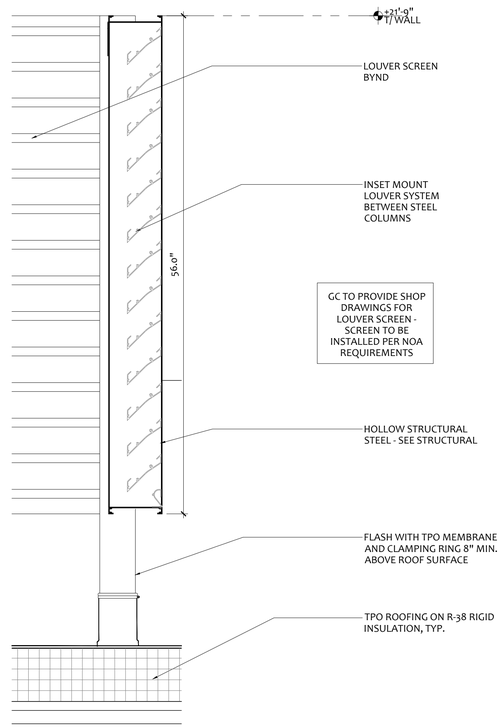

6 ROOF EQUIPMENT ENCLOSURE
1-1/2" = 1'-0"

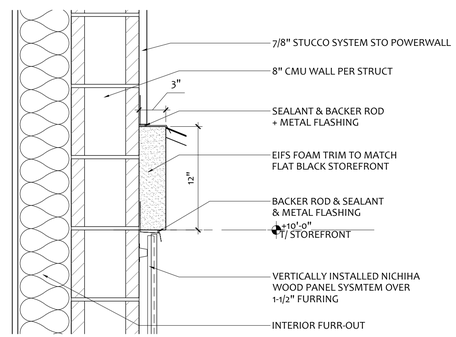

5 EIFS TRIM DETAIL
1-1/2" = 1'-0"

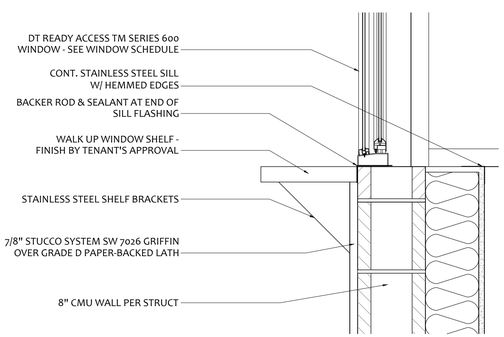

4 D/THRU WINDOW-SHELF DETAIL
1-1/2" = 1'-0"

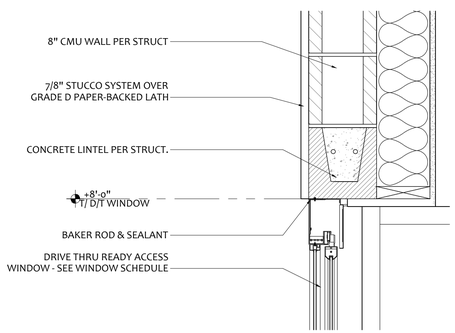

3 HEAD D/THRU WINDOW DETAIL
1-1/2" = 1'-0"

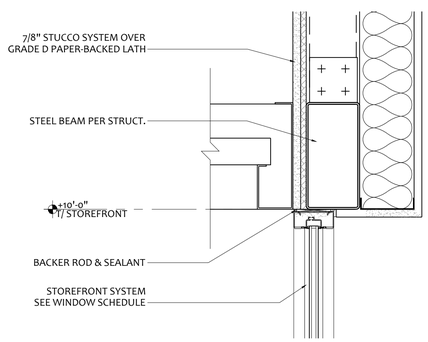

2 HEAD STOREFRONT DETAIL
1-1/2" = 1'-0"

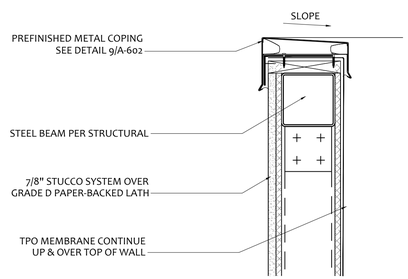

1 PARAPET CAP DETAIL
1-1/2" = 1'-0"

COPYRIGHT STATEMENT

These documents, their contents, and the ideas, designs, and concepts presented here-in are the property of ELEVEN18 Architecture and are issued only for the specific project noted on these documents. Holders of these documents that have established a mutually agreed contractual relationship with ELEVEN18 Architecture have been granted a limited license to reproduce these documents in relationship to the specific project referenced. All others are subject to US Copyright Law as defined by Title 17 of the United States Code and other regional laws as may apply. Any revisions, reproductions, modifications, or re-use of these documents without the express written consent of ELEVEN18 Architecture is prohibited by Law.

10 JUL 2023

STATE OF FLORIDA · MATTHEW A. CONTE · AR96819 · REGISTERED ARCHITECT

Matt Conte, AIA
FL. REG.#AR96819

ELEVEN 18 ARCHITECTURE
A WOMEN'S BUSINESS ENTERPRISE
FL License: AA26001884

Mailing Address:
424 E. Central Blvd. #542
Orlando, FL 32801
www.eleven18architecture.com

Physical Address:
1011 E. Colonial Dr. #307
Orlando, FL 32803
407-745-5300

© Copyright 2019 ELEVEN18 ARCHITECTURE, PL
All Rights Reserved Worldwide

PROJECT NAME:

STARBUCKS TUSKAWILLA
3645 Aloma Ave.
Oviedo, FL 32765

ELEVEN18 PROJECT LEAD:
Maria Lopez
407-745-5300 Ext. 106
mlopez@eleven18architecture.com

PROJECT TEAM:
Javier Rosas

REVISIONS

#	DATE	DESC.
--	06.26.2023	PERMIT SUBMITTAL

A602
WALL & ROOF DETAILS

GENERAL NOTES

1. EXIT DOORS SHALL BE OPERATIONAL FROM THE INSIDE WITHOUT USE OF A KEY, TOOL, SPECIAL KNOWLEDGE OR EFFORT. DEVICES SHALL BE CAPABLE OF OPERATING WITH ONE HAND AND SHALL NOT REQUIRE TIGHT GRASPING, TIGHT PINCHING, OR TWISTING OF THE WRIST TO OPERATE. HARDWARE REQUIRED FOR ACCESSIBLE DOOR PASSAGE SHALL BE MOUNTED NO HIGHER THAN 48 INCHES ABOVE FINISH FLOOR.
2. DOOR CLOSERS TO BE SET AT MAXIMUM OF 5 LBF.
3. THRESHOLDS: CHANGES IN LEVEL GREATER THAN 1/4" IN HEIGHT AND NOT MORE THAN 1/2" MAX. IN HEIGHT SHALL BE BEVELED WITH A SLOPE NOT STEEPER THAN 1:2.
4. DOOR HARDWARE SHALL BE MOUNTED BETWEEN 36" AND 42" ABOVE FLOOR AND BE LEVER TYPE.
5. ALL HARDWARE WILL BE US26D SATIN CHROME PLATED, EXCEPT: PUSH PLATES, DOOR PULLS, KICKPLATES WHICH SHOULD BE US32D STAINLESS STEEL, UNLESS OTHERWISE NOTED.

GLAZING NOTES

1. ALL GLASS & GLAZING SHALL COMPLY WITH CHAPTER 54 OF THE U.S. CONSUMER PRODUCT SAFETY COMMISSION SAFETY STANDARDS FOR ARCHITECTURAL GLAZING MATERIALS (16-CFR PART 1201).
2. ALL GLAZING, GLAZING SYSTEMS, COMPONENTS & CLADDING SHALL MEET THE DESIGN WIND PRESSURES SPECIFIED IN COMPLIANCE WITH IBC 16.06.16.1 WINDOW & DOOR MANUFACTURERS TEST REPORTS & INSTALLATION DETAILS SHALL BE INCLUDED AS PART OF PERMIT SUBMITTAL. SUBMIT SHOP DRAWINGS OF ALL DOORS, GLAZING & HARDWARE FOR REVIEW.
3. ALL GLAZING WITHIN 24" OF DOOR SHALL BE SAFETY GLASS. ALL GLAZING IN HAZARDOUS LOCATIONS SHALL BE TEMPERED FOR IMPACT RESISTANCE.

HARDWARE GROUPS

HARDWARE GROUP A (STOREFRONT/ENTRY)

- WEATHER STRIPPING: HARD-BACKED POLY PILE IN DOOR AND/ON FRAME.
- THRESHOLD: EXTRUDED ALUMINUM WITH RIBBED SURFACE.
- SILL SWEEPS: BRUSH STRIP, CONCEALED.
- PIVOTING/HINGING: OFFSET PIVOT: TOP AND INTERMEDIATE
- CLOSERS: DORMA BTS 80 NHO; CONCEALED FLOOR CLOSER, SINGLE ACTING, OFFSET PIVOT.
- LATCHES/STRIKE: ADAMS-RITE MS1830 WITH PROVISIONS FOR KEYED CYLINDERS ON INTERIOR FACE ONLY; MOUNT TO BOTTOM RAIL.
- KEYING: ALL LOCKSET AND DEADBOLTS SHALL BE KEYED AS DIRECTED BY OWNER
- PUSH/PULLS: ARCADIA RADIUS PUSH-PULL SET: STRAIGHT PULL OPTION: CLEAR FINISH
- CYLINDER GUARD
- TRANSOM DECAL: ("THIS DOOR TO REMAIN UNLOCKED DURING BUSSINES HOURS")

NOTES:
1. GC TO PROVIDE ALL HARDWARE NOT PROVIDED BY STOREFRONT VENDOR
2. ALL LOCKSET AND DEADBOLTS SHALL BE KEYED AS DIRECTED BY OWNER
3. FINISHES: GENERAL: US26D, SATIN CHROME PLATED, EXCEPT: PUSH PLATES, DOOR PULLS, KICKPLATES: US32D, SATIN STAINLESS STEEL
   DOOR CLOSERS: 689/SPRAYED ALUMINUM

HARDWARE GROUP B (SERVICE DOOR)

- THRESHOLD: NATIONAL GUARD - 325 HALF SADDLE THRESHOLD
- SECURING DEVICE: FALCON LOCK - C607 7-PIN CORE COMBINATION "A" KEYWAY
- SECURING DEVICE: SUR-LOCK - I/O 2000L-031C AUTO LOCKING DOOR ALARM, IC; NO CTR INCLUDES - MORTISE CYLINDER
- CLOSER: DORMA 8916 DOOR CLOSER 8916 AF89P
- KICKPLATE: ROCKWOOD 10" KICKPLATE
- PEEP HOLE: DS-6 DOOR SPY
- DOOR BELL: NUTONE - MCV309NWHGL DOOR BELL
- DOOR STOP: ROCKWOOD 473 DOOR STOP WITH HOOK
- MISCELLANEOUS: NATIONAL GUARD - 16A RAIN DRIP
- MISCELLANEOUS: NATIONAL GUARD - 137NA WEATHER STRIP

NOTES:
1. LOCAL BARRIER FREE CODE MAY REQUIRE LARGER KICK PLATES VERIFY BEFORE ORDERING
2. REAR EXTERIOR DOORS SHALL HAVE EXTERIOR KEYED ACCESS.
3. FINISHES: GENERAL: US26D, SATIN CHROME PLATED, EXCEPT: PUSH PLATES, DOOR PULLS, KICKPLATES: US32D, SATIN STAINLESS STEEL
   DOOR CLOSERS: 689/SPRAYED ALUMINUM

DOOR SCHEDULE

DOOR #	DOOR WIDTH	DOOR HEIGHT	DOOR THICKNESS	DOOR TYPE	FRAME TYPE	MATERIALS AND FINISHES				HARDWARE	FIRE RATING	COMMENTS
						DOOR MATERIAL	DOOR FINISH	FRAME MATERIAL	FRAME FINISH			
101	6'-4"	7'-0"	--	A	ALUM	GLASS	--	ALUM	--	A	--	
102	3'-4"	7'-0"	--	A	ALUM	GLASS	--	ALUM	--	A	--	
103	3'-6"	7'-0"	1-3/4"	B	STL	STL	PAINT	STL	PAINT	B	--	COLD ROLLED/WELDED 16 GA STEEL

NOTE: STEEL DOOR/FRAME TO HAVE HOT DIP GALV-ANNEALED COATING. FINISH WITH TWO COATS SHOP PRIME COLOR SIMILAR TO FINISH. SEE EXTERIOR ELEVATION FOR FINAL PAINT COLORS.

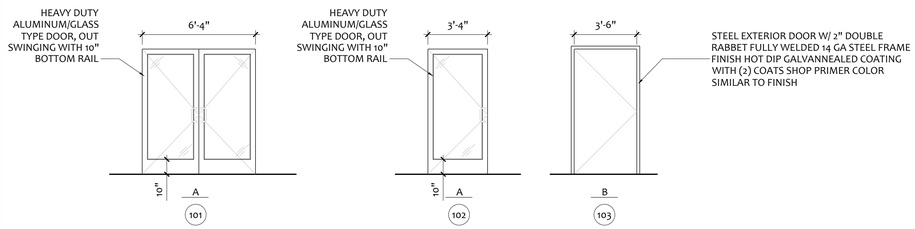

01 DOOR TYPES
1/4" = 1'-0"

0 2' 8'
1' 4'

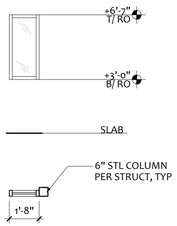

CALL OUT: D	FRAME MATERIAL: ALUMINUM
TYPE: WINDOW	FRAME FIN EXT: ANODIZED TO MATCH FLAT BLACK
MFR / PRODUCT: KAWNEER 451T, 4-1/2" DEEP FRAME x 2-1/2" SIGHTLINE (OR EQ.); CENTER SET; FLUSH DESIGN, THERMALLY BROKEN OR EQ. PROVIDE HURRICANE RESISTANT FRAMES.	FRAME FIN INT: ANODIZED TO MATCH FLAT BLACK
GLAZING: 1" INSULATED TEMPERED CLEAR GLAZING, NON-TINTED, NON-REFLECTIVE, SAFETY RATED, IMPACT-RESISTANT W/ DOUBLE GLAZED AND LOW-E GLASS, MIN U-VALUE OF 0.39, SHGC OF 0.25. DUAL SEALED UNITS	NOTES: PROVIDE WELDED SILL PAN WITH END DAMS AT ALL WINDOW SILLS TO MATCH STOREFRONT

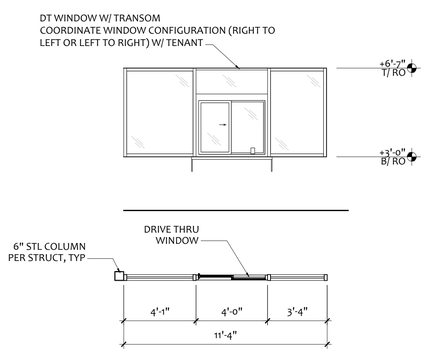

CALL OUT: C	FRAME MATERIAL: ALUMINUM
TYPE: DRIVE THRU WINDOW	FRAME FIN EXT: ANODIZED TO MATCH FLAT BLACK
MFR / PRODUCT: READY ACCESSTM SERIES 600 MOER DRIVE-THRU SERVICE WINDOW. INCLUDE TRANSOM, SIDELIGHTS, HEATER AND/OR AIR CURTAIN AS REQUIRED PER LOCAL CODE. WINDOW AND AIR CURTAIN FINISH TO MATCH ADJACENT STOREFRONT.	FRAME FIN INT: ANODIZED TO MATCH FLAT BLACK
GLAZING: 1" INSULATED TEMPERED CLEAR GLAZING, NON-TINTED, NON-REFLECTIVE, SAFETY RATED, IMPACT-RESISTANT W/ DOUBLE GLAZED AND LOW-E GLASS, MIN U-VALUE OF 0.39, SHGC OF 0.25. DUAL SEALED UNITS; PROVIDE 3/4" SMASH AND GRAB GLAZING AT READY ACCESS WINDOW	NOTES: PROVIDE WELDED SILL PAN WITH END DAMS AT ALL WINDOW SILLS TO MATCH STOREFRONT - HEIGHT OF WINDOW SILLL MUST BE 36" ABOVE INTERNAL FINISHED FLOOR AND 42" ABOVE EXT'R D/T LANE SURFACE

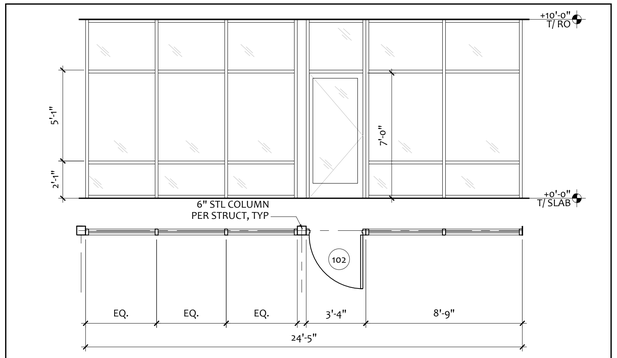

CALL OUT: B	FRAME MATERIAL: ALUMINUM
TYPE: STOREFRONT	FRAME FIN EXT: ANODIZED TO MATCH FLAT BLACK
MFR / PRODUCT: KAWNEER 451T, 4-1/2" DEEP FRAME x 2-1/2" SIGHTLINE (OR EQUAL); CENTER SET; FLUSH DESIGN, THERMALLY BROKEN OR EQ, PROVIDE HURRICANE RESISTANT FRAMES.	FRAME FIN INT: ANODIZED TO MATCH FLAT BLACK
	DOOR MATERIAL: ALUMINUM
HARDWARE TYPE: SEE HARDWARE SCHEDULE	DOOR FIN EXT: ANODIZED TO MATCH FLAT BLACK
HARDWARE FINISH: SEE HARDWARE SCHEDULE	DOOR FIN INT: ANODIZED TO MATCH FLAT BLACK
GLAZING: 1" INSULATED TEMPERED CLEAR GLAZING, NON-TINTED, NON-REFLECTIVE, SAFETY RATED, IMPACT-RESISTANT W/ DOUBLE GLAZED AND LOW-E GLASS, MIN U-VALUE OF 0.39, SHGC OF 0.25. DUAL SEALED UNITS	NOTES: PROVIDE WELDED SILL PAN WITH END DAMS AT ALL WINDOW SILLS TO MATCH CURTAIN WALL SYSTEM

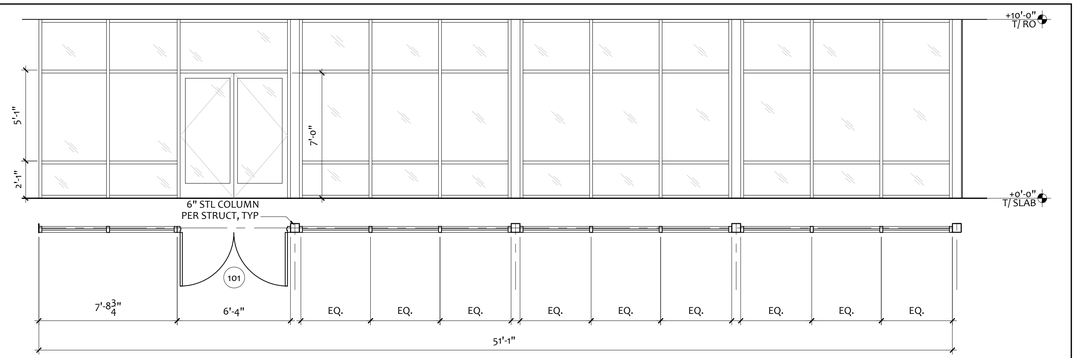

CALL OUT: A	FRAME MATERIAL: ALUMINUM
TYPE: STOREFRONT	FRAME FIN EXT: ANODIZED TO MATCH FLAT BLACK
MFR / PRODUCT: KAWNEER 451T, 4-1/2" DEEP FRAME x 2-1/2" SIGHTLINE (OR EQUAL); CENTER SET; FLUSH DESIGN, THERMALLY BROKEN OR EQ, PROVIDE HURRICANE RESISTANT FRAMES.	FRAME FIN INT: ANODIZED TO MATCH FLAT BLACK
	DOOR MATERIAL: ALUMINUM
HARDWARE TYPE: SEE HARDWARE SCHEDULE	DOOR FIN EXT: ANODIZED TO MATCH FLAT BLACK
HARDWARE FINISH: SEE HARDWARE SCHEDULE	DOOR FIN INT: ANODIZED TO MATCH FLAT BLACK
GLAZING: 1" INSULATED TEMPERED CLEAR GLAZING, NON-TINTED, NON-REFLECTIVE, SAFETY RATED, IMPACT-RESISTANT W/ DOUBLE GLAZED AND LOW-E GLASS, MIN U-VALUE OF 0.39, SHGC OF 0.25. DUAL SEALED UNITS	NOTES: PROVIDE WELDED SILL PAN WITH END DAMS AT ALL WINDOW SILLS TO MATCH CURTAIN WALL SYSTEM

COPYRIGHT STATEMENT

These documents, their contents, and the ideas, designs, and concepts presented here-in are the property of ELEVEN18 Architecture and are issued only for the specific project noted on these documents. Holders of these documents that have established a mutually agreed contractual relationship with ELEVEN18 Architecture have been granted a limited license to reproduce these documents in relationship to the specific project referenced. All others are subject to US Copyright Law as defined by Title 17 of the United States Code and other regional laws as may apply. Any revisions, reproductions, modifications, or re-use of these documents without the express written consent of ELEVEN18 Architecture is prohibited by Law.

10 JUL 2023

STATE OF FLORIDA
MATTHEW A CONTE
AR96819
REGISTERED ARCHITECT

Matt Conte, AIA
FL. REG.#AR96819

ELEVEN18 ARCHITECTURE
A WOMEN'S BUSINESS ENTERPRISE
FL License: AA26001884

Mailing Address:
424 E. Central Blvd. #542
Orlando, FL 32801
www.eleven18architecture.com

Physical Address:
101 E. Colonial Dr. #307
Orlando, FL 32803
407-745-5300

© Copyright 2019 ELEVEN18 ARCHITECTURE, PL
All Rights Reserved Worldwide

PROJECT NAME:

STARBUCKS TUSKAWILLA
3645 Aloma Ave.
Oviedo, FL 32765

ELEVEN18 PROJECT LEAD:
Maria Lopez
407-745-5300 Ext. 106
mlopez@eleven18architecture.com

PROJECT TEAM:
Javier Rosas

REVISIONS

#	DATE	DESC.
--	06.26.2023	PERMIT SUBMITTAL

A701
DOOR & GLAZING SCHEDULES

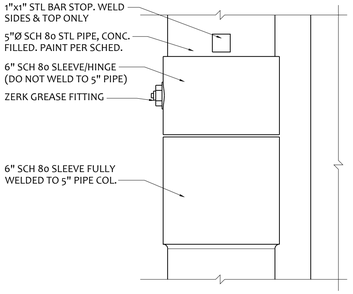

06 HINGE DETAIL (SIDE VIEW)
3" = 1'-0"

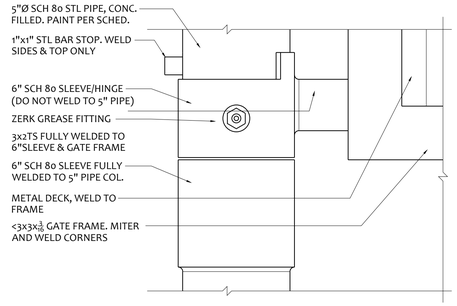

07 HINGE DETAIL (FRONT VIEW)
3" = 1'-0"

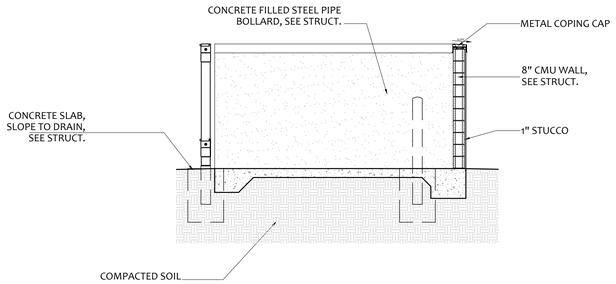

05 SECTION
1/4" = 1'-0"

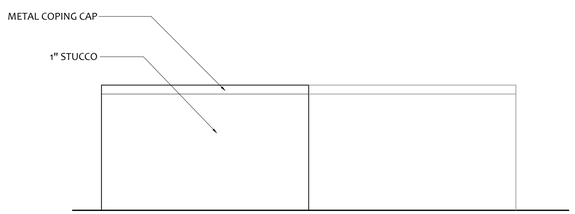

04 DUMSPTER REAR ELEVATION
1/4" = 1'-0"

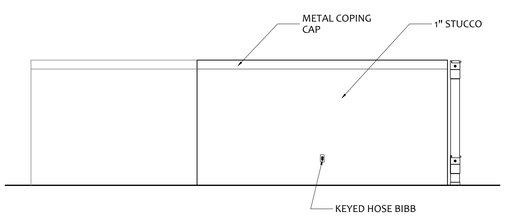

03 DUMPSTER SIDE ELEVATION
1/4" = 1'-0"

DUMPSTER ENCLOSURE GENERAL NOTES:

1. SEE CIVIL DRAWINGS FOR EXACT LOCATION OF DUMPSTER.
2. CONTRACTOR TO VERIFY THE OPENING WIDTH AND ALL OTHER DIMENSIONS COMPLY WITH CITY ORDINANCES AND WASTE MANAGEMENT REQUIREMENTS.
3. ALL EXPOSED METAL FRAMING, METAL COPING AND METAL ROOF DECK GATES PAINTED POWDER COAT BLACK.
4. ALL DIMENSIONS TO BE FIELD VIF.
5. TRASH ENCLOSURE MATERIALS, FINISHES AND COLORS CONTINGENT UPON TENANT LEASE AGREEMENT.
6. REFER TO SHEET A301 FOR BUILDING FINISHES TO MATCH DUMPSTER ENCLOSURE WALLS.
7. REFER TO SHEET S-7 FOR FOUNDATION, SLAB GRADE, WALL SECTION, BOLLARD SECTION AND OTHER STRUCTURAL DETAILS CONCERNING TO DUMPSTER ENCLOSURE AND DIMENSIONS.

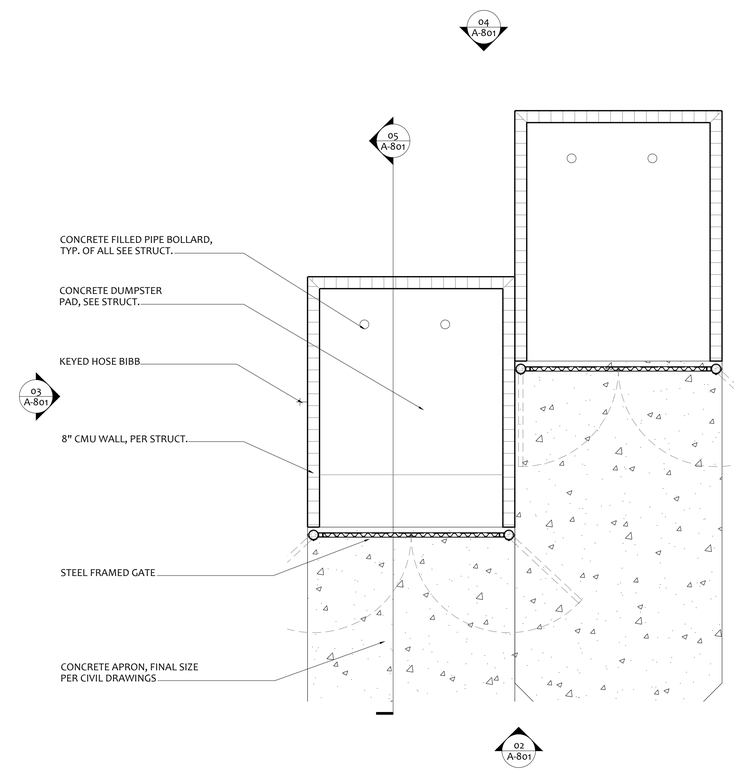

01 DUMPSTER ENCLOSURE - PLAN
1/4" = 1'-0"

NORTH

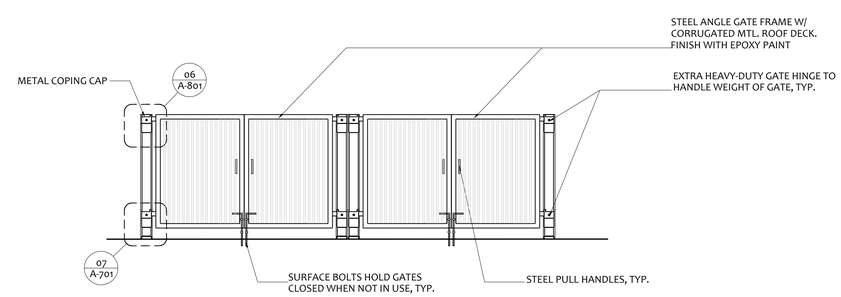

02 DUMPSTER FRONT ELEVATION
1/4" = 1'-0"

COPYRIGHT STATEMENT

These documents, their contents, and the ideas, designs, and concepts presented here-in are the property of ELEVEN18 Architecture and are issued only for the specific project noted on these documents. Holders of these documents that have established a mutually agreed contractual relationship with ELEVEN18 Architecture have been granted a limited license to reproduce these documents in relationship to the specific project referenced. All others are subject to US Copyright Law as defined by Title 17 of the United States Code and other regional laws as may apply. Any revisions, reproductions, modifications, or re-use of these documents without the express written consent of ELEVEN18 Architecture is prohibited by Law.

10 JUL 2023

STATE OF FLORIDA · MATTHEW A. CONTE · AR96819 · REGISTERED ARCHITECT

Matt Conte, AIA
FL. REG.#AR96819

ELEVEN18 ARCHITECTURE
A WOMEN'S BUSINESS ENTERPRISE
FL License: AA26001884

Mailing Address:
424 E. Central Blvd. #542
Orlando, FL 32801
www.eleven18architecture.com

Physical Address:
101 E. Colonial Dr. #307
Orlando, FL 32803
407-745-5300

© Copyright 2019 ELEVEN18 ARCHITECTURE, PL
All Rights Reserved Worldwide

PROJECT NAME:

STARBUCKS TUSKAWILLA
3645 Aloma Ave.
Oviedo, FL 32765

ELEVEN18 PROJECT LEAD:
Maria Lopez
407-745-5300 Ext. 106
mlopez@eleven18architecture.com

PROJECT TEAM:
Javier Rosas

REVISIONS

#	DATE	DESC.
--	06.26.2023	PERMIT SUBMITTAL

A801
DUMPSTER ENCLOSURE

STRUCTURAL NOTES

CONTRACTOR NOTE:

THE CONTRACTOR IS SOLELY RESPONSIBLE FOR INITIATING, MAINTAINING AND SUPERVISING ALL SAFETY PRECAUTIONS AND PROGRAMS IN CONNECTION WITH THE WORK. GUTHERMAN STRUCTURAL, INC. IS NOT RESPONSIBLE FOR THE MEANS AND METHODS OF CONSTRUCTION OR FOR RELATED SAFETY PRECAUTIONS AND PROGRAMS.

CODES AND STANDARDS

1. WIND LOADS AS PER:

   A. FLORIDA BUILDING CODE 7TH EDITION (2020) WITH AN ULTIMATE DESIGN WIND SPEED OF 139 MPH, EXPOSURE B, NOMINAL DESIGN WIND SPEED OF 107 MPH, +/-0.18 INTERNAL PRESSURE COEFFICIENT, AND BUILDING RISK CATEGORY II.

2. SEISMIC SITE CLASS = E
   SEISMIC DESIGN CATEGORY = A
   GROUND SNOW LOAD, Pg = 0 PSF
   FLOOD ZONE = X
   RAIN INTENSITY = 4.5 INCHES PER HOUR (100 YEAR)

3. THE PROJECT WAS DESIGNED IN ACCORDANCE WITH THE:

   A. FLORIDA BUILDING CODE 7TH EDITION (2020).
   B. BUILDING CODE REQUIREMENTS FOR REINFORCED CONCRETE (ACI 318/ 2014 EDITION).
   C. SPECIFICATION FOR THE DESIGN, FABRICATION & ERECTION OF STRUCTURAL STEEL FOR BUILDINGS. (AMERICAN INSTITUTE OF STEEL CONSTRUCTION) AISC 13TH EDITION (ASD).
   D. BUILDING CODE REQUIREMENTS AND SPECIFICATIONS FOR MASONRY STRUCTURES (TMS 402, 602/2016 EDITION).
   E. LIGHT GAUGE STUD FRAMING SHALL COMPLY WITH ASTM STANDARDS AND HAVE BEEN DESIGNED IN ACCORDANCE WITH THE AMERICAN IRON AND STEEL INSTITUTE'S SPECIFICATION FOR THE DESIGN OF COLD-FORMED STEEL STRUCTURAL MEMBERS, AISI S-100-16.

4. ARCHITECTURAL AND MECHANICAL DRAWINGS:

   A. THE STRUCTURAL DRAWINGS ARE PART OF THE CONTRACT DOCUMENTS AND DO NOT BY THEMSELVES PROVIDE ALL THE INFORMATION REQUIRED TO PROPERLY COMPLETE THE PROJECT STRUCTURE. THE GENERAL CONTRACTOR SHALL CONSULT THE ARCHITECTURAL, MECHANICAL AND ELECTRICAL DRAWINGS AND COORDINATE THE INFORMATION CONTAINED IN THESE DRAWINGS WITH THE STRUCTURAL DRAWINGS TO PROPERLY CONSTRUCT THE PROJECT.

   B. REFER TO ARCHITECTURAL, MECHANICAL OR ELECTRICAL DRAWINGS FOR ADDITIONAL OPENINGS, DEPRESSIONS, FINISHES, INSERTS, BOLTS SETTINGS, DRAINS, REGLETS, ETC.

   C. BEFORE ORDERING ANY MATERIALS OR DOING ANY WORK, THE CONTRACTOR SHALL VERIFY ALL MEASUREMENTS TO PROPERLY SIZE OR FIT THE WORK. NO EXTRA CHARGE OR COMPENSATION WILL BE ALLOWED BY THE OWNER RESULTING FROM THE CONTRACTOR'S FAILURE TO COMPLY WITH THIS REQUIREMENT.

   D. DISCREPANCIES SHALL BE BROUGHT TO THE ATTENTION OF THE ARCHITECT AND ENGINEER BEFORE PROCEEDING WITH ANY WORK.

   E. ALL STRUCTURES HAVE BEEN DESIGNED TO RESIST THE DESIGN LOADS LISTED ONLY AS COMPLETED STRUCTURES. THE GENERAL CONTRACTOR SHALL FULLY BRACE AND OTHERWISE PROTECT WORK IN PROGRESS UNTIL THE STRUCTURES ARE COMPLETED. THE GENERAL CONTRACTOR SHALL ALSO INSURE THAT ITS OPERATIONS AND PROCEDURES PROVIDE NO LOADING GREATER THAN THE DESIGN LOADS LISTED ON ANY MEMBER.

5. SECTIONS AND DETAILS:

   ALL DETAILS, SECTIONS AND NOTES SHOWN ON THE DRAWINGS ARE INTENDED TO BE TYPICAL AND SHALL APPLY TO SIMILAR SITUATIONS ELSEWHERE UNLESS OTHERWISE SHOWN.

6. MATERIALS AND ASSEMBLY TEST AS FOLLOWS:

   A. EXTERIOR WINDOWS, SLIDING AND PATIO GLASS DOORS SHALL BE TESTED BY AN APPROVED INDEPENDENT TESTING LABORATORY, AND SHALL BE LABELED WITH AN APPROVED LABEL IDENTIFYING THE MANUFACTURER, PERFORMANCE CHARACTERISTICS AND APPROVED PRODUCT CERTIFICATION AGENCY, TESTING LABORATORY, EVALUATION ENTITY OR FLORIDA STATE WIDE PRODUCT APPROVAL NUMBER TO INDICATE COMPLIANCE WITH THE REQUIREMENTS OF ONE OF THE FOLLOWING SPECIFICATIONS:

   ANSI/AAMA/NWWDA 101/I.S. 2-97 OR TAS 202

   B. EXTERIOR DOOR ASSEMBLIES SHALL BE TESTED FOR STRUCTURAL INTEGRITY IN ACCORDANCE WITH ASTM E330 AT A LOAD OF 1.5 TIMES THE REQUIRED DESIGN PRESSURE LOAD. THE LOAD SHALL BE SUSTAINED FOR 10 SECONDS WITH NO PERMANENT DEFORMATION OF ANY MAIN FRAME OR PANEL MEMBER IN EXCESS OF 0.4 PERCENT OF ITS SPAN AFTER THE LOAD IS REMOVED. HVHZ SHALL COMPLY WITH TAS 202. AFTER EACH SPECIFIED LOADING, THERE SHALL BE NO GLASS BREAKAGE, PERMANENT DAMAGE TO FASTENERS, HARDWARE PARTS, OR ANY OTHER DAMAGE, WHICH CAUSES THE DOOR TO BE INOPERABLE.

   C. WINDOW AND DOOR ASSEMBLIES SHALL BE ANCHORED IN ACCORDANCE WITH THE PUBLISHED MANUFACTURER'S RECOMMENDATIONS TO ACHIEVE THE DESIGN PRESSURE SPECIFIED. SUBSTITUTE ANCHORING SYSTEM USED FOR SUBSTRATES NOT SPECIFIED BY THE FENSTRATION MANUFACTURER SHALL PROVIDE EQUAL OR GREATER ANCHORING PERFORMANCE AS DEMONSTRATED BY ACCEPTED ENGINEERING PRACTICE.

SPECIALTY ENGINEERED PRODUCTS

1. THE GENERAL CONTRACTOR IS RESPONSIBLE TO COORDINATE THE PROPER SUBMISSION OF SPECIALTY ENGINEERED SHOP DRAWINGS WHICH SHALL BE SIGNED AND SEALED BY AN ENGINEER REGISTERED IN THE STATE OF FLORIDA. IT IS THE GENERAL CONTRACTOR'S RESPONSIBILITY TO ASSURE THAT THE SPECIALTY ENGINEERED SHOP DRAWINGS ARE SUBMITTED IN A TIMELY MANNER SO AS TO ALLOW REVIEWS AND RESUBMISSIONS AS REQUIRED. ALL SPECIALTY ENGINEERED PRODUCTS SHALL BE DESIGNED FOR THE APPROPRIATE GRAVITY LOADS AND WIND LOADS INCLUDING UPLIFT AND LATERAL LOADS. INTERIOR SPECIALTY PRODUCTS SHALL BE DESIGNED FOR LATERAL LOADS TO ASSURE STABILITY. SPECIALTY ENGINEERED PRODUCTS SHALL BE, BUT ARE NOT LIMITED TO, THE FOLLOWING:

   A. LIGHT GAUGE METAL, INCLUDING BUT NOT LIMITED TO, SOFFITS, CLADDING, CEILINGS, ETC.

   B. MISCELLANEOUS METALS INCLUDING STEEL STAIRS, MECHANICAL EQUIPMENT SUPPORTS, FRAMES THAT SUPPORT MACHINES, PIPES OR OTHER STRUCTURAL METAL USED FOR SUPPORT OF MECHANICAL SYSTEMS.

   C. MISCELLANEOUS HANGERS, CHANDELIERS, CABINETS, METAL FRAMES, LADDERS, RIGGING, HANGING WALLS, RAILINGS, GLAZING FRAMES, CLADDING SUCH AS STONE, PRECAST, ALUMINUM, METAL PANELS, CABLE BARRIER SYSTEMS, ETC. OR ANY OTHER MISCELLANEOUS PRODUCT REQUIRED BY ANY OF THE CONSTRUCTION DOCUMENTS.

   D. IN ADDITION TO THE LOADS SHOWN IN THE DESIGN LOAD SCHEDULE, THE SPECIALTY ENGINEER SHALL DESIGN FOR THE WEIGHT OF ALL MECHANICAL, PLUMBING AND ELECTRICAL EQUIPMENT AND FIXTURES, AS WELL AS CHANDELIER FIXTURES, BAR CABINETS, AND ART WORK / MOBILES.

GENERAL CONTRACTOR TO INCLUDE IN THEIR BID THE COST OF THE ABOVE NOTED SPECIALTY ENGINEERING.

FOUNDATION

1. ALL SITE PREPARATION AND EXCAVATION WORK IS TO BE PERFORMED IN STRICT ACCORDANCE WITH THE REPORT ON SOILS AND FOUNDATION INVESTIGATION PREPARED BY UNIVERSAL ENGINEERING SCIENCES, DATED APRIL 18,2023. UES REPORT NO.2014244

2. BOTTOM OF FOOTINGS ASSUMED TO BEAR ON SOIL CAPABLE OF SAFELY SUPPORTING 2500 PSF.

3. SOILS SUPPORTING ALL FOOTINGS MUST BE INSPECTED AND APPROVED BY A REGISTERED SOILS ENGINEER BEFORE COMMENCING WORK. APPROVAL IN WRITING MUST INDICATE THE SOIL IS ADEQUATE TO SAFELY SUSTAIN SPECIFIED SOIL BEARING PRESSURE.

5. TOP OF ALL SPREAD FOOTINGS SHALL BE 1'-4" BELOW TOP OF SLAB TYP. MAKE ADJUSTMENTS AS NEEDED SO TOP OF ALL EXTERIOR FOOTINGS SHALL BE MINIMUM 12-INCHES BELOW EXTERIOR FINISH GRADE.

6. ALL MONOLITHIC EDGE FOOTINGS SHALL BEAR A MINIMUM 1'-0" BELOW EXTERIOR GRADE TYP. MAKE ADJUSTMENTS AS NEEDED.

7. EXCAVATION & BACKFILL:

   A. ALL EXCAVATION SHALL BE KEPT DRY. EXCAVATE TO DEPTHS AND DIMENSIONS INDICATED. TAKE EVERY PRECAUTION TO GUARD AGAINST ANY MOVEMENT OR SETTLEMENT OF ADJACENT STRUCTURES, UTILITIES, PIPING, ETC.

   B. PROVIDE ANY BRACING OR SHORING NECESSARY TO AVOID SETTLEMENT OR DISPLACEMENT OF EXISTING FOUNDATION OR STRUCTURES.

8. CENTERLINE OF FOOTINGS: SHALL COINCIDE WITH CENTERLINE OF COLUMNS UNLESS OTHERWISE NOTED ON DRAWINGS.

9. DIMENSIONS: ALL DIMENSIONS AND ELEVATIONS SHOWN ON THE STRUCTURAL DRAWINGS MUST BE VERIFIED AND COORDINATED WITH THE ARCHITECTURAL DRAWINGS BY THE CONTRACTOR BEFORE PROCEEDING WITH THE CONSTRUCTION. DISCREPANCIES SHALL BE BROUGHT TO THE ATTENTION OF THE ARCHITECT OR ENGINEER IN WRITING BEFORE PROCEEDING WITH ANY WORK.

CONCRETE

1. CONCRETE ELEMENTS TO HAVE THE FOLLOWING STRENGTHS:

   A. FOUNDATIONS 3000 PSI
   B. SLAB-ON-GRADE 3000 PSI
   C. COLUMNS 4000 PSI
   D. BEAMS 4000 PSI
   F. MASONRY GROUT 3000 PSI

   ALL OTHER CONCRETE TO BE 4000 PSI UNLESS NOTED OTHERWISE.

2. ALL CONCRETE SHALL BE READY MIX AND MEET THE FOLLOWING REQUIREMENTS:

   A. SLUMPS SHALL BE 4-INCHES MINIMUM AND 6-INCHES MAXIMUM.
   B. CONCRETE SHALL HAVE 3 PERCENT AIR ENTRAINMENT.
   C. ALL CONCRETE TO HAVE MAXIMUM WATER/CEMENT RATIO OF 0.55.
   D. JOBSITE WATER SHALL NOT BE ADDED.
   E. CEMENT SHALL CONFORM WITH ASTM C150 TYPE 1. SLAG, ASTM C989 SHALL BE LIMITED TO 50% (BY WEIGHT OF CEMENTITIOUS MATERIAL AND FLY ASH, ASTM C618, CLASS F, SHALL BE LIMITED TO 25% (BY WEIGHT) OF CEMENTITIOUS MATERIAL.

3. ALL CONCRETE WORK SHALL COMPLY WITH THE REQUIREMENTS OF THE ACI BUILDING CODE (ACI 318/ 2014 EDITION), THE ACI DETAILING MANUAL (ACI 315/ 2004 EDITION), AND THE SPECIFICATIONS FOR STRUCTURAL CONCRETE FOR BUILDINGS (ACI 301/ LATEST EDITION).

4. SUBMIT ALL REINFORCING STEEL SHOP DRAWINGS FOR APPROVAL PRIOR TO ANY FABRICATION.

5. CONCRETE COVER FOR REINFORCING STEEL SHALL BE AS REQUIRED BY ACI SPECIFICATIONS.

6. WELDED WIRE FABRIC SHALL COMPLY WITH ASTM A 1064, UNLESS OTHERWISE SPECIFIED. PLACE FABRIC 2" CLEAR FROM TOP OF THE SLAB IN SLAB ON GRADE AND SUPPORT ON SLAB BOLSTERS SPACED AT 3'-0" O.C.

7. LAP ALL BARS WITH CLASS B TENSION LAP SPLICE UNLESS OTHERWISE NOTED ON DRAWINGS. LAP ALL WWF A MINIMUM OF 12 INCHES (UNLESS OTHERWISE NOTED).

8. REINFORCING BARS:

   A. ALL REINFORCING STEEL SHALL BE MANUFACTURED FROM HIGH STRENGTH BILLET STEEL CONFORMING TO ASTM DESIGNATION A 615 GRADE 60.

   B. AT CORNERS OF CONCRETE WALLS, BEAMS AND CONTINUOUS WALL FOOTINGS, PROVIDE (1-#5 OR MATCHING) HORIZONTAL BARS X 5'-0" BENT BAR FOR EACH HORIZONTAL BAR SCHEDULED AT EACH FACE.

   C. WHERE COLUMNS ARE AN INTEGRAL PART OF CONCRETE WALLS, WALL REINFORCEMENT SHALL BE CONTINUOUS THRU THE COLUMNS.

   D. ALL HOOKS SHOWN IN REINFORCEMENT SHALL BE ACI RECOMMENDED HOOKS UNLESS OTHERWISE NOTED.

MASONRY

1. MASONRY UNITS SHALL BE LOAD BEARING ASTM C90, NORMAL WEIGHT LAID IN A FULL BED OF MORTAR IN RUNNING BOND.

2. THE COMPRESSIVE STRENGTH OF MASONRY (F'M) SHALL BE 2,000 PSI AS CALCULATED IN ACCORDANCE WITH ASTM C-140.

3. ALL MORTAR SHALL BE IN ACCORDANCE WITH ASTM SPECIFICATION C270 HAVING A MINIMUM COMPRESSIVE STRENGTH OF (S) 1,800 PSI OR (M) 2,500 PSI

4. GROUT SHALL BE A HIGH SLUMP MIX IN ACCORDANCE WITH ASTM SPECIFICATION C476, HAVING A MINIMUM COMPRESSIVE STRENGTH OF 3,000 PSI.

5. ALL CONCRETE MASONRY BEARING AND SHEAR WALLS SHALL BE INSPECTED BY A CERTIFIED INSPECTION COMPANY AND CONSTRUCTED IN ACCORDANCE WITH THE BUILDING CODE REQUIREMENT FOR MASONRY STRUCTURES TMS602/ACI530.1/ASCE 6.

6. PROVIDE 8" X 8" MASONRY BEAM WITH 1 #5 CONT. AT EVERY WINDOW SILL. EXTEND BEAM 8" BEYOND EDGE OF OPENING.

7. ALL VERTICAL REINFORCING SHALL BE HOOKED AT TOP AND BOTTOM AT ALL VERTICAL REINFORCED CELL RUNS. THIS INCLUDES IN BEAMS AND LINTELS OVER OPENINGS.

8. THE GENERAL CONTRACTOR SHALL PROVIDE AND INSTALL BRACING FOR ALL MASONRY WALLS AS REQUIRED TO ENSURE STABILITY DURING CONSTRUCTION.

9. PROVIDE HOT DIPPED GALVANIZED LADDER TYPE HORIZONTAL JOINT REINFORCEMENT (9 GA.) AT 16" ON CENTER VERTICAL IN ALL MASONRY WALLS. PROVIDE DOVE TAIL SLOT ANCHORS AT CONCRETE COLUMNS.

   FOR JOINT REINFORCEMENT, WALL TIES, ANCHORS AND INSERTS, APPLY A MINIMUM COAT OF 1.5 OUNCES PER SQUARE FOOT (PSF) (458/G/M2) COMPLY WITH THE REQUIREMENTS OF ASTM A153, CLASS B.

10. PROVIDE CONTROL JOINTS IN MASONRY WALLS AT A SPACING OF 25' + O.C. AND ALIGN WITH ARCHITECTURAL CONTROL JOINTS.

11. THE GENERAL CONTRACTOR SHALL PROVIDE CMU LEDGERS AT ALL FOUNDATIONS WHICH RECEIVE STONE OR BRICK VENEERS, AS NEEDED TO ACCOMODATE THE WIDTH OF VENEERS SPECIFIED BY THE ARCHITECT. ATTACHMENT TO THE MAIN STRUCTURAL SHALL BE #5 DOWELS INTO THE FOOTING AT 72" O.C., OR CORRUGATED MASONRY TIES AT 16" O.C. HORIZONTAL AND VERTICAL.

12. MINIMUM LAP SPLICES FOR REINFORCED MASONRY:

BAR SIZE				
#4	#5	#6	#7	
13"	20"	29"	40"	

   A. LAP SPLICES SHALL OCCUR DIRECTLY ABOVE FOOTINGS AND SLABS. NO SPLICES ARE ALLOWED AT MID-HEIGHT OF WALL.

   B. LAP SPLICES THAT OCCURE AT CANTILEVERED WALLS SUCH AS: PARAPETS, RETAING WALLS, ETC. SHALL HAVE LAP SPLICE LENGTHS INCREASED BY 50%.

13. MASONRY LINTELS:

   A. A PRECAST CONCRETE LINTEL BY PRE-CAST MANUF. SHALL BE PROVIDED OVER ALL MASONRY WALL OPENINGS. THE LINTEL SHALL BE FULLY GROUTED.

   B. LINTELS TO HAVE 4" MINIMUM BEARING AT EACH END.

   C. SHORE PRECAST LINTEL PER MANUFACTURE'S INSTRUCTIONS.

STEEL

1. ALL STRUCTURAL STEEL SHALL BE FABRICATED AND ERECTED IN ACCORDANCE WITH THE LATEST AISC CODE. STRUCTURAL STEEL SHALL CONFORM TO:

   A. ASTM SPECIFICATION A 992 GRADE 50 FOR ALL WIDE FLANGE BEAMS.
   B. ASTM SPECIFICATION A 36 FOR MISCELLANEOUS STEEL SHAPES (ANGLES, PLATES, ETC.).
   C. SQUARE OR RECTANGULAR HSS SHALL CONFORM TO ASTM SPECIFICATION A 500 GRADE B (FY=46 KSI).
   D. ALL STEEL TO HAVE A SHOP COAT OF RUST INHIBITIVE PAINT.

2. ALL SHOP AND FIELD WELDING SHALL BE PERFORMED BY WELDERS QUALIFIED, AS DESCRIBED IN "AMERICAN WELDING SOCIETY'S STANDARD QUALIFICATION PROCEDURE" (AWS D1.1), TO PERFORM THE TYPE OF WORK REQUIRED.

3. ALL CONNECTIONS SHALL BE BOLTED WITH 3/4" DIAMETER, A-325 HIGH STRENGTH BOLTS OR WELDED (UNLESS SHOWN OTHERWISE ON THE DRAWINGS).

   A. ALL CONNECTIONS TO HOLLOW STRUCTURAL SECTION (HSS) COLUMNS ARE TO BE THRU-PLATE UNLESS NOTED OTHERWISE.

4. ALL ALUMINUM AND STEEL MEMBERS TO BE TREATED OR PROPERLY SEPARATED TO PREVENT GALVANIC AND CORROSIVE EFFECTS.

5. ALL STEEL WELDING RODS SHALL BE E70XX ELECTRODES.

6. EQUIPMENT SUPPORTS:

   PROVIDE ALL SUPPORTING STEEL NOT INDICATED ON PLAN AS REQUIRED FOR THE INSTALLATION OF MECHANICAL EQUIPMENT AND MATERIALS, INCLUDING ANGLES, CHANNELS, BEAMS, HANGERS, ETC. DO NOT SUPPORT EQUIPMENT OR PIPING FROM METAL DECKING.

7. DECK SUPPORTS:

   PROVIDE 1/4" BENT PLATES AT ALL HIPS, VALLEYS, SKEWED BEAMS AND OTHER AREAS FOR DECK SUPPORT.

JOISTS

1. ALL JOISTS SHALL HAVE A SHOP COAT OF RUST INHIBITIVE NON BITUMINOUS PAINT.

2. JOIST FABRICATOR SHALL HAVE A SPECIALTY ENGINEER REGISTERED IN THE STATE OF FLORIDA SIGN AND SEAL ALL STEEL JOIST SHOP DRAWINGS. THESE SHOP DRAWINGS SHALL CONTAIN A STATEMENT CERTIFYING THAT THE STEEL JOISTS CAN SAFELY RESIST THE WIND UPLIFT FORCES AS NOTED.

3. STEEL JOISTS SHALL BE DESIGNED, FABRICATED AND ERECTED TO THE REQUIREMENTS OF THE SPECIFICATIONS OF THE STEEL JOIST INSTITUTE FOR SERIES K JOISTS

   MANUFACTURER SHALL BE A MEMBER OF THE STEEL JOIST INSTITUTE. PROVIDE BRIDGING IN ACCORDANCE WITH SJI STANDARDS UNLESS NOTED OTHERWISE ON THE DRAWINGS.

DECK

1. STEEL ROOF DECK SHALL BE:

   A. 1-1/2", 22 GA. TYPE B METAL DECK GALVANIZED AS SHOWN ON ROOF PLAN AS MANUFACTURED BY VULCRAFT/NUCOR OR APPROVED EQUAL. MANUFACTURER SHALL BE A MEMBER OF THE STEEL DECK INSTITUTE. ROOF DECK MUST COMPLY WITH STEEL DECK INSTITUTE STANDARDS. ALL ROOF DECK SHALL BE CONTINUOUS OVER A MINIMUM OF THREE SPANS.

2. ALL ROOF DECK TO BE DESIGNED, MANUFACTURED, AND INSTALLED IN ACCORDANCE WITH LATEST FACTORY MUTUAL STANDARDS.

3. WELDING WASHERS ARE TO BE USED ON ALL CONNECTIONS OF STEEL DECK WITH METAL THICKNESS LESS THAN 22 GA. TO STRUCTURAL STEEL SUPPORTS.

4. IN AREAS OF WARPED ROOF DECK, SELF DRILLING SCREWS ARE TO BE USED ON CONNECTIONS OF STEEL ROOF DECK TO STRUCTURAL STEEL SUPPORTS. SCREW SIZES TO COMPLY WITH MANUFACTURER'S AND FACTORY MUTUAL REQUIREMENTS. ATTACH DECK TO ALL SUPPORTING ROOF JOISTS.

5. 1-1/2" METAL ROOF DECK IS TO BE ATTACHED TO STRUCTURAL STEEL SUPPORTS WITH 5/8" DIAMETER PUDDLE WELDS (MINIMUM OF 4 WELDS PER SHEET PER JOIST). SIDE JOINTS SHALL BE FASTENED TOGETHER WITH #10 SELF DRILLING SCREWS AT MID SPAN BETWEEN SUPPORTS (MINIMUM OF 5 PER SPAN), UNLESS INDICATED OTHERWISE ON THE DRAWINGS.

SHOP DRAWINGS

1. THE SHOP DRAWINGS SHALL BE SUBMITTED IN COMPLETE PACKAGES FOR THE FOLLOWING:

   A. CONCRETE MIX DESIGNS
   B. CONCRETE REINFORCING STEEL AND WELDED WIRE FABRIC
   C. CONCRETE MASONRY UNIT SUBMITTALS AND OTHER MASONRY ACCESSORIES
   D. STRUCTURAL STEEL
   E. STEEL JOISTS AND JOIST GIRDERS
   F. STEEL DECK
   G. PRE-ENGINEERED ALUMINUM CANOPIES OR AWNINGS

2. PRE-ENGINEERED ITEMS SHALL BE SUBMITTED SIGNED AND SEALED BY A SPECIALTY ENGINEER REGISTERED IN THE STATE OF FLORIDA.

STEEL COLUMN SCHEDULE

MARK	SIZE	BASE PL	A.B.
SC-1	HSS 6 X 6 X 1/2	BP-1	(6) 1"Ø
SC-2	HSS 6 X 6 X 1/4	SEE SECTION	SEE SECTION

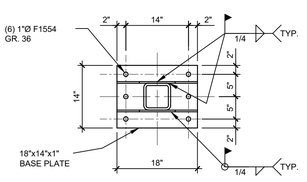

BASE PLATE (BP-1)

LONG PLATE DIMENSION PARALLEL TO FRAME

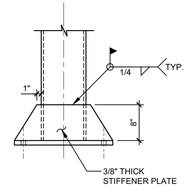

BASE PLATE DETAIL (TYPICAL)

BEAM SCHEDULE

MARK	(inches)	REINFORCING BOTT	REINFORCING TOP	REINFORCING INT	REMARKS
BB-1	8x8	(1) #5	-	-	MASONRY BOND BEAM
BB-2	8x16	(1) #5	(1) #5	-	MASONRY BOND BEAM
CB-1	8x16	(2) #6	(2) #6	-	#3 STIRRUPS AT 6" O.C.

FOOTING SCHEDULE

MARK	SIZE	REINFORCING
F20.12	2'-0" X 12" X CONT.	(3) #5 BOTTOM CONT.
F40.12	4'-0" X 12" X CONT.	(5) #5 BOTTOM CONT. #5 @ 12" o.c. BOTT. TRANS.
TS20	2'-0" X 2'-0" X 16"	(3) #5 BOTTOM EACH WAY

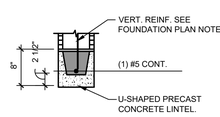

L-1

(8F8-1B)

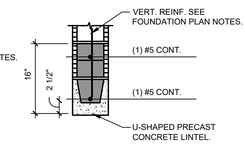

L-2

(8F16-1B/1T)

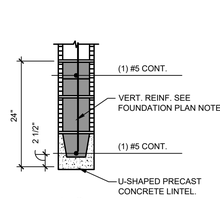

L-3

(8F24-1B/1T)

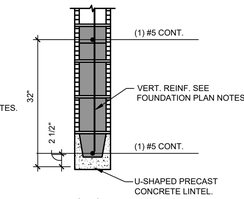

L-4

(8F32-1B/1T)

C.M.U. PRECAST LINTEL SCHEDULE

N.T.S.

NOTES:

1. 8" PRECAST LINTELS BY CASTCRETE CORPORATION OR APPROVED EQUAL.
2. SHORE PRECAST LINTEL PER MANUFACTURER RECOMMENDATIONS.
3. SEE THE ARCHITECTURAL DRAWINGS FOR SIZE AND LOCATION OF ALL OPENINGS.
4. PROVIDE 8" MINIMUM BEARING EACH END.

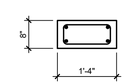

C-1 CONCRETE COLUMN:

1. REINF. WITH (4) #5 VERT. AND #3 TIES AT 8" O.C. AS SHOWN

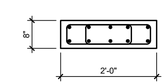

C-1 CONCRETE COLUMN:

1. REINF. WITH (10) #5 VERT. AND #3 TIES AT 8" O.C. AS SHOWN

DESIGN LOAD SCHEDULE

(ALL LOADS SHOWN ARE IN POUNDS PER SQ. FT.)

COMPONENT \ AREA	ROOF	SLAB ON GRADE				
SYSTEM	10					
CEILING & MECH'L	10					
MISC.	10					
TOTAL RAIN LOAD	25					
TOTAL DEAD LOAD	30					
TOTAL LIVE LOAD	20	100				
TOTAL LOAD	55	100				

USE 5 PSF TO OBTAIN NET UPLIFT FROM WIND LOAD SCHEDULE

ROOF WIND PRESSURE (PSF) Vasd

COMPONENTS AND CLADDING

EFFECTIVE WIND AREA (SQ. FT.)	ROOF AREA 1'	1	2	3
20	+10.0/-15.8	+10.0/-26.4	+15.0/-32.2	+15.0/-32.2

NOTES:

1. WIND DESIGN PER FBC 7TH EDITION (2020)
2. (Vasd) = ALLOWABLE WIND LOADS
3. Kd = 1.0
3. +: INDICATES WIND PRESSURE
-: INDICATES WIND SUCTION
4. h=16FT (ROOF)
   0.6h=9.6FT, 0.2h=3.2FT
   (COMPONENTS AND CLADDING)
5. FOR EFFECTIVE WIND AREAS BETWEEN THOSE GIVEN ABOVE THE LOAD MAY BE INTERPOLATED, OTHERWISE USE THE LOAD ASSOCIATED WITH THE LOWER EFFECTIVE WIND AREA.

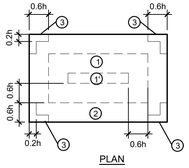

PLAN

DOOR & WINDOW WIND PRESSURE (PSF) Vasd

SIZE OF WALL OPENING (SQ. FT.)	WALL AREA 4	5
10	+15.8/-17.1	+15.8/-21.0
20	+15.0/-15.9	+15.0/-18.6
50	+14.2/-15.5	+14.2/-17.8
100	+13.5/-14.7	+13.5/-16.4

NOTES:

1. WIND DESIGN PER FBC-7TH EDITION (2020)
2. +: INDICATES WIND PRESSURE
-: INDICATES WIND SUCTION
3. WALL DISTANCE A = 4.2 FT (COMPONENTS AND CLADDING)
4. FOR WALL OPENINGS BETWEEN THOSE GIVEN ABOVE THE LOAD MAY BE INTERPOLATED, OTHERWISE USE THE LOAD ASSOCIATED WITH THE LOWER WALL OPENING AREA.

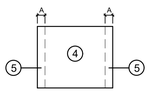

WALL ELEVATION

MASONRY WALL SCHEDULE

MARK	THICKNESS	REINFORCING
MW-1	8" CMU	#5 @ 48" O.C.
MW-2	8" CMU	#5 @ 24" O.C.
MW-3	8" CMU	#5 @ 8" O.C.

MASONRY WALL NOTES:

1. WALL SEGMENTS SHALL BE REINFORCED WITH 9 GA. GALVANIZED LATERAL REINFORCING @ 16" O.C. HORIZ. EXTEND REINFORCING 6" INTO POURED ELEMENTS AND AROUND ENCASED STEEL.
2. ADJACENT TO ANY EXTERIOR/INTERIOR WALL OPENING, PLACE 1 #5 VERTICAL IN CELL GROUTED SOLID, FULL HEIGHT FOR OPENING LESS THAN 4FT. PROVIDE (2) #5 OTHERWISE.
3. ALL MASONRY REINFORCED CELLS SHALL BE FILLED WITH 3000 PSI GROUT MIX.

COPYRIGHT STATEMENT

These documents, their contents, and the ideas, designs, and concepts presented here-in are the property of ELEVEN18 Architecture and are issued only for the specific project noted on these documents. Holders of these documents that have established a mutually agreed contractual relationship with ELEVEN18 Architecture have been granted a limited license to reproduce these documents in relationship to the specific project referenced. All others are subject to US Copyright Law as defined by Title 17 of the United States Code and other regional laws as may apply. Any revisions, reproductions, modifications, or re-use of these documents without the express written consent of ELEVEN18 Architecture is prohibited by Law.

John Gutherman Jr. 2023.06.26 13:17:39-04'00'

JOHN GUTHERMAN JR. LICENSE No. 60880 STATE OF FLORIDA PROFESSIONAL ENGINEER

THIS ITEM HAS BEEN ELECTRONICALLY SIGNED AND SEALED BY JOHN GUTHERMAN JR. PE # 60880 USING A DIGITAL SIGNATURE.

PRINTED COPIES OF THIS DOCUMENT ARE NOT CONSIDERED SIGNED AND SEALED AND THE SIGNATURE MUST BE VERIFIED ON ANY ELECTRONIC COPIES.

ELEVEN 18 ARCHITECTURE

A WOMEN'S BUSINESS ENTERPRISE

FL License: AA26001884

Mailing Address:
424 E. Central Blvd. #542
Orlando, FL 32801
www.eleven18architecture.com

Physical Address:
101 E. Colonial Dr. #307
Orlando, FL 32803
407-745-5300

© Copyright 2019 ELEVEN18 ARCHITECTURE, PL
All Rights Reserved Worldwide

PROJECT NAME:

STARBUCKS TUSKAWILLA

3645 Aloma Ave.
Oviedo, FL 32765

Gutherman STRUCTURAL

GUTHERMAN STRUCTURAL INC.
130 CROWN OAK CENTRE DRIVE
LONGWOOD, FL 32750
P: 407.951.8065
LIC. # 28863

ELEVEN18 PROJECT LEAD:
Maria Lopez
407-745-5300 Ext. 106
mlopez@eleven18architecture.com

PROJECT TEAM:

REVISIONS

#	DATE	DESC.
--	06.26.2023	PERMIT SUBMITTAL

GENERAL NOTES & SCHEDULES

S-0

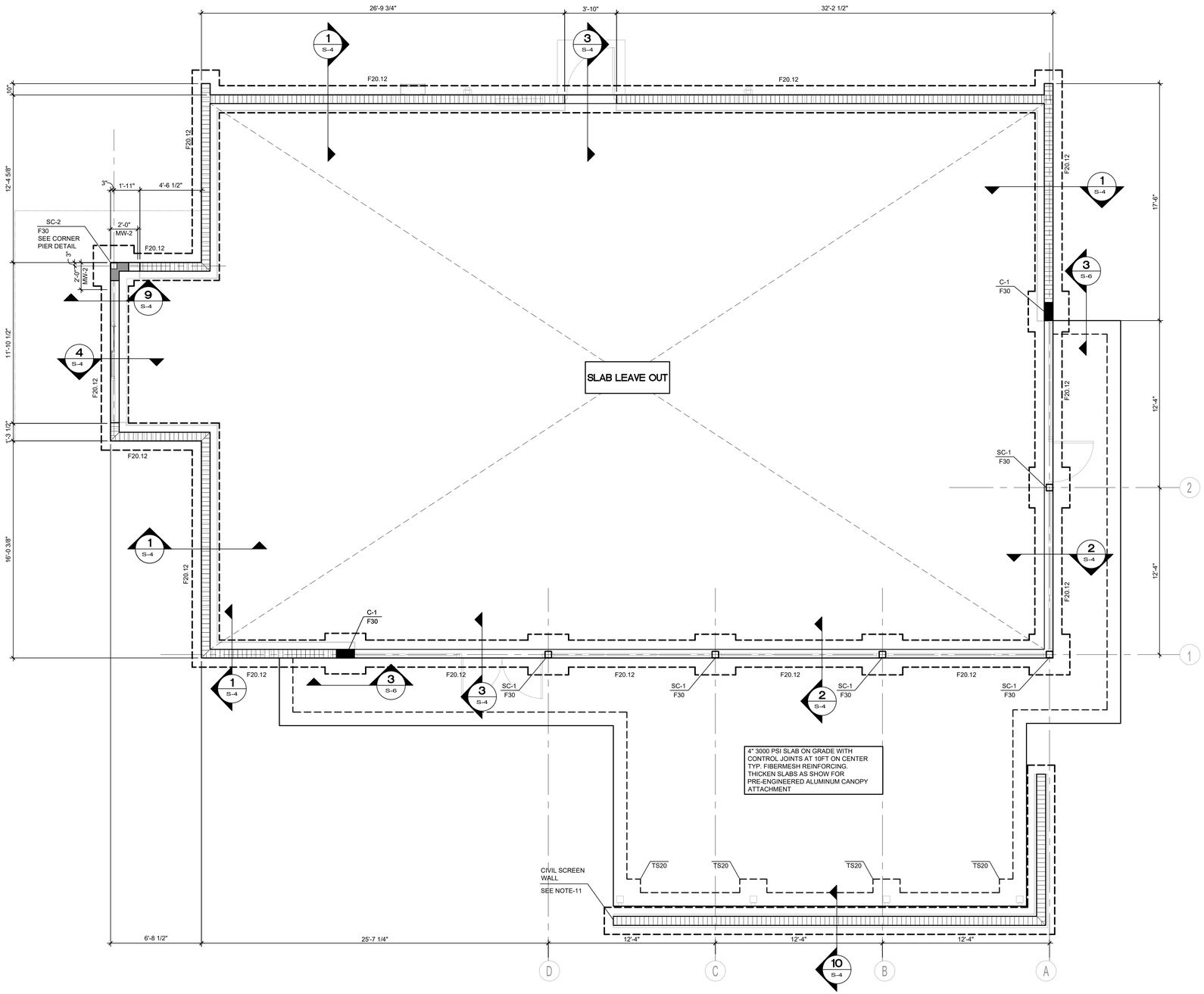

01 FOUNDATION PLAN
1/4" = 1'-0"

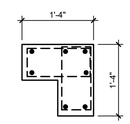

DRIVE-THRU CORNER PIER

L-SHAPED CONCRETE PIER AT CORNER OF DRIVE THROUGH, BELOW STEEL COLUMN. PROVIDE (7) #5 AS SHOWN, WITH #3 TIES AT 8" O.C. TOP OF COLUMN IS TOP OF SILL, (-3'-0")

FOUNDATION NOTES:

1. ELEV. ±0'-0" IS REFERENCE ONLY. SEE CIVIL FOR TRUE NAVD ELEVATION.
2. VERIFY SLOPES AND STEPS WITH ARCH'L PRIOR TO CONSTRUCTION. SEE TYPICAL STEP DETAIL.
3. TOP OF SPREAD FOOTING ELEVATIONS = -1'-4" BELOW TOP OF SLAB TYP. U.N.O.
4. T.E. INDICATES THICKENED EDGE SEE TYPICAL DETAILS.
5. F# INDICATES CONCRETE FOOTING. SEE SCHEDULE.
6. SC-# INDICATES STEEL COLUMN, SEE SCHEDULE.
7. DENOTES 8" CMU WALL, ALL MASONRY WALLS ARE MW-1 U.N.O., SEE SCHEDULE.
8. G.C. TO PROVIDE SLAB ON GRADE CONTROL JOINTS (C.J.) FOR ALL SLAB AT 12'-0" O.C. MAX. TYP. FOR WALL AND SLAB CONTROL JOINTS. SEE TYPICAL DETAILS AND MORE INFO.
9. C-# INDICATES CONCRETE COLUMN. SEE SCHEDULE.
10. SEE ARCH. FOR DIMENSIONS NOT SHOWN.
11. VERIFY SCREEN WALL LOCATION AND DIMENSIONS WITH ARCH AND CIVIL.

COPYRIGHT STATEMENT

These documents, their contents, and the ideas, designs, and concepts presented here-in are the property of ELEVEN18 Architecture and are issued only for the specific project noted on these documents. Holders of these documents that have established a mutually agreed contractual relationship with ELEVEN18 Architecture have been granted a limited license to reproduce these documents in relationship to the specific project referenced. All others are subject to US Copyright Law as defined by Title 17 of the United States Code and other regional laws as may apply. Any revisions, reproductions, modifications, or re-use of these documents without the express written consent of ELEVEN18 Architecture is prohibited by Law.

John Gutherman Jr. 2023.06.26 13:12:38-04'00'

JOHN GUTHERMAN JR. LICENSE No. 60880 STATE OF FLORIDA PROFESSIONAL ENGINEER

THIS ITEM HAS BEEN ELECTRONICALLY SIGNED AND SEALED BY JOHN GUTHERMAN JR. PE # 60880 USING A DIGITAL SIGNATURE.

PRINTED COPIES OF THIS DOCUMENT ARE NOT CONSIDERED SIGNED AND SEALED AND THE SIGNATURE MUST BE VERIFIED ON ANY ELECTRONIC COPIES.

ELEVEN 18 ARCHITECTURE
A WOMEN'S BUSINESS ENTERPRISE
FL License: AA26001884

Mailing Address:
424 E. Central Blvd. #542
Orlando, FL 32801
www.eleven18architecture.com

Physical Address:
1011 E. Colonial Dr. #307
Orlando, FL 32803
407-745-5300

© Copyright 2019 ELEVEN18 ARCHITECTURE, PL
All Rights Reserved Worldwide

PROJECT NAME:

STARBUCKS TUSKAWILLA

3645 Aloma Ave.
Oviedo, FL 32765

Gutherman STRUCTURAL
GUTHERMAN STRUCTURAL INC.
130 CROWN OAK CENTRE DRIVE
LONGWOOD, FL 32750
P: 407.951.8065
L/C. # 28863

ELEVEN18 PROJECT LEAD:
Maria Lopez
407-745-5300 Ext. 106
mlopez@eleven18architecture.com

PROJECT TEAM:

REVISIONS		
#	DATE	DESC.
--	06.26.2023	PERMIT SUBMITTAL

FOUNDATION PLAN

S-1

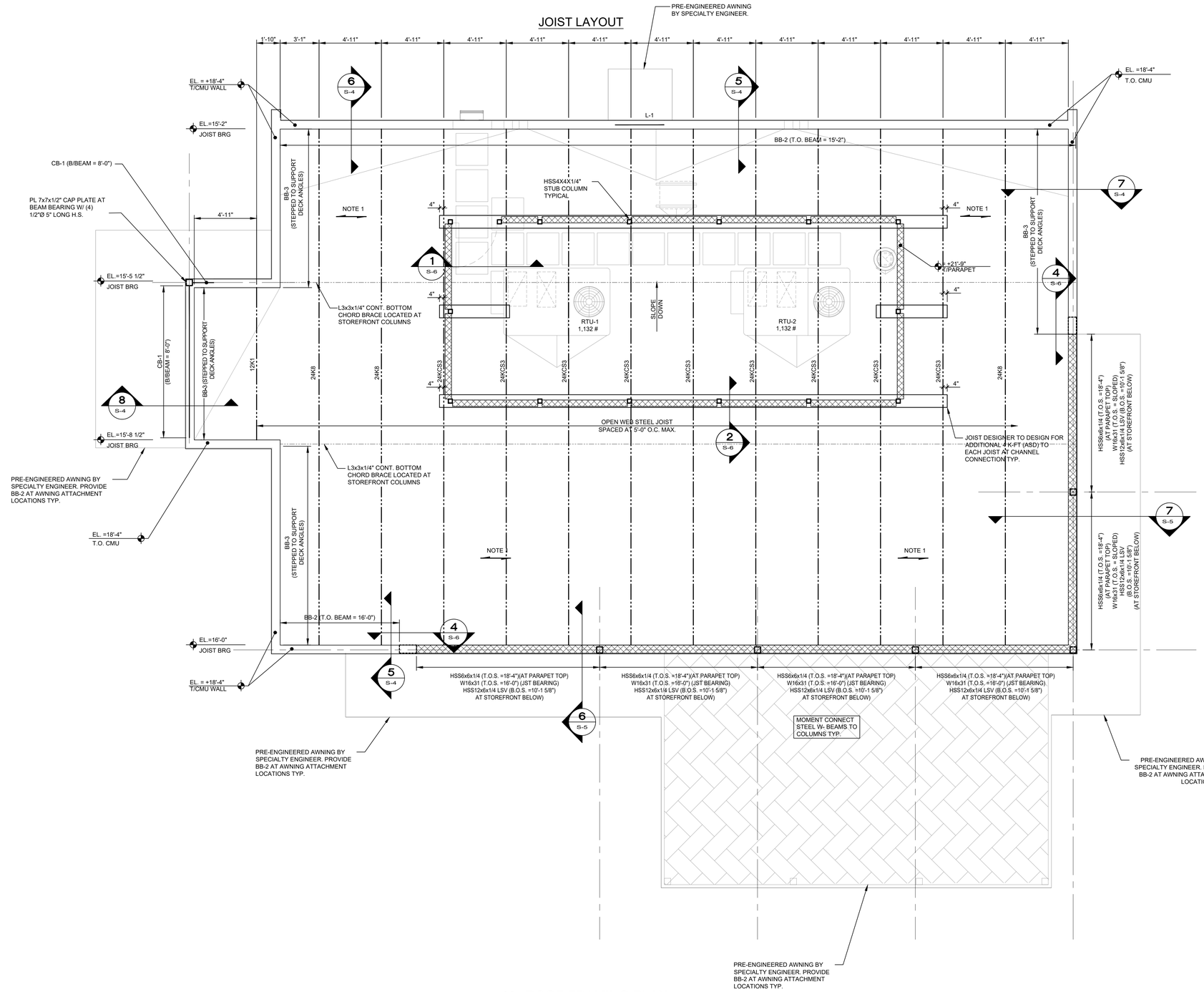

01 ROOF FRAMING PLAN
1/4" = 1'-0"

TYPICAL ROOF DECK CONNECTION SCHEDULE

MARK	ATTACHMENT		
	PERPENDICULAR TO SUPPORT	PARALLEL TO SUPPORT	SEAMS
A	5/8" Ø PUDDLE WELD @ 12" O.C. (36/4 PATTERN)	PUDDLE WELD @ 12" O.C.	(6) #10 TEK SCREWS
B	5/8" Ø PUDDLE WELD @ 6" O.C. (36/7 PATTERN)	PUDDLE WELD @ 6" O.C.	(6) #10 TEK SCREWS

NOTES:

1. ALL PUDDLE WELDS TO BE 5/8"Ø FUSION TYPE (UNO).
2. WELDS TO BE MADE FOLLOWING AWS D1.3 SPECIFICATIONS BY QUALIFIED WELDING OPERATORS.
3. ALL DECK END LAPS TO BE A MINIMUM OF 2".
4. SEE SECTIONS AND DETAILS FOR ADDITIONAL WELDS REQUIRED.

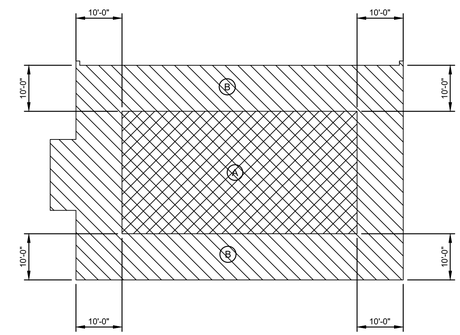

ROOF FRAMING NOTES

1. ALL METAL ROOF DECK SHALL BE 1.5" TYP B 22GA (G60) TYP. SEE SCHEDULE AND NOTES ON THIS SHEET FOR ATTACHMENT.
2. L-# INDICATES PRECAST LINTEL, SEE SCHEDULE.
3. BB-# INDICATES MASONRY BOND BEAM, SEE SCHEDULE.
4. CB-# INDICATES CONCRETE BEAM. SEE SCHEDULE.
5. PROVIDE A 8x8 MASONRY BOND BEAM (BB-1) W/ (1) #5 CONT. AT THE TOP OF ALL WALLS. PROVIDE AN 8x16 MASONRY BOND BEAM (BB-2) AT ALL JOIST AND DECK BEARING LOCATIONS W/ (1) #5 CONT. TOP AND BOTTOM, TYP.
6. VERIFY ALL TOP OF PARAPET W/ ARCH DRAWINGS.
7. PROVIDE A CONTINUOUS BB-1 AT WALL MID-HEIGHT ALIGNED WITH TOP OF DOORS, TYP.
8. SEE ARCH. FOR DIMENSIONS NOT SHOWN, TYP.
9. THE G.C. SHALL VERIFY WEIGHT AND LOCATION OF ALL MECH'L EQUIPMENT TO BE SUPPORTED BY ROOF STRUCTURE W/ MECH'L & EQUIPMENT SUPPLIER PRIOR TO FABRICATION AND CONSTRUCTION. REPORT ANY DISCREPANCIES TO ARCHITECT AND ENGINEER.
10. JOIST BRIDGING SHALL BE PER JOIST MANUFACTURER'S RECOMMENDATIONS. PROVIDE UPLIFT BRIDGING AT ENDS OF JOISTS.
11. CONCRETE BEAMS TO BEAR 16" MINIMUM ON MASONRY SUPPORTS, TYP.
12. ALL BEAMS SHOWNS CB- OR L- ARE OVER OPENINGS, TYP.
13. ALL METAL STUDS SHALL BE SHEATHED WITH 5/8" DENSGLASS W/ #10 S-TYPE BUGLE HEAD SCREWS AT 6" O.C. ALONG EDGES INT. SUPPORTS.
14. STEEL JOISTS HAVE BEEN DESIGNED TO SUPPORT WEIGHT OF ALL ROOF TOP UNITS AND ALL STRUCTURES SHOWN.
15. INDICATES 6" 20GA @ 6" O.C. INFILL.

COPYRIGHT STATEMENT

These documents, their contents, and the ideas, designs, and concepts presented here-in are the property of ELEVEN18 Architecture and are issued only for the specific project noted on these documents. Holders of these documents that have established a mutually agreed contractual relationship with ELEVEN18 Architecture have been granted a limited license to reproduce these documents in relationship to the specific project referenced. All others are subject to US Copyright Law as defined by Title 17 of the United States Code and other regional laws as may apply. Any revisions, reproductions, modifications, or re-use of these documents without the express written consent of ELEVEN18 Architecture is prohibited by Law.

John Gutherman Jr. 2023.06.26 13:14:55-04'00'

JOHN GUTHERMAN JR. LICENSE No. 60880 STATE OF FLORIDA PROFESSIONAL ENGINEER

THIS ITEM HAS BEEN ELECTRONICALLY SIGNED AND SEALED BY JOHN GUTHERMAN JR. PE # 60880 USING A DIGITAL SIGNATURE.

PRINTED COPIES OF THIS DOCUMENT ARE NOT CONSIDERED SIGNED AND SEALED AND THE SIGNATURE MUST BE VERIFIED ON ANY ELECTRONIC COPIES.

ELEVEN 18 ARCHITECTURE
A WOMEN'S BUSINESS ENTERPRISE
FL License: AA26001884

Mailing Address:
424 E. Central Blvd. #542
Orlando, FL 32801
www.eleven18architecture.com

Physical Address:
101 E. Colonial Dr. #307
Orlando, FL 32803
407-745-5300

© Copyright 2019 ELEVEN18 ARCHITECTURE, PL
All Rights Reserved Worldwide

PROJECT NAME:

STARBUCKS TUSKAWILLA
3645 Aloma Ave.
Oviedo, FL 32765

Gutherman STRUCTURAL
GUTHERMAN STRUCTURAL INC.
130 CROWN OAK CENTRE DRIVE
LONGWOOD, FL 32750
P: 407.951.8665
LIC. # 28863

ELEVEN18 PROJECT LEAD:
Maria Lopez
407-745-5300 Ext. 106
mlopez@eleven18architecture.com

PROJECT TEAM:

REVISIONS		
#	DATE	DESC.
--	06.26.2023	PERMIT SUBMITTAL

ROOF FRAMING PLAN

S-2

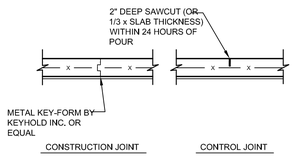

TYPICAL SLAB-ON-GRADE

NOTE: CONTROL JOINTS/CONSTRUCTION JOINTS SHALL CREATE PANELS OF 144 SQ. FEET (MAXIMUM)

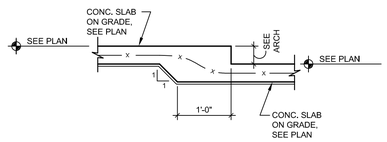

TYPICAL SLAB RECESS

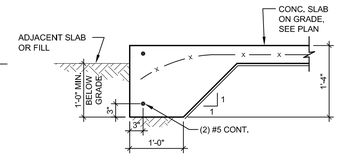

THICKENED EDGE (T.E.)

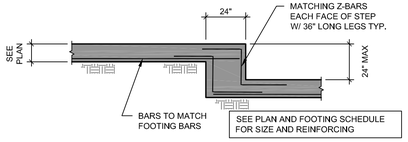

TYPICAL STEP FOOTING DETAIL

N.T.S.

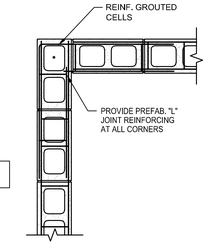

PARTIAL PLAN TYPICAL CMU WALL DETAILS

N.T.S.

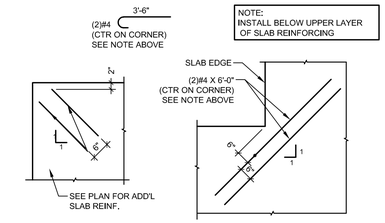

TYP. SLAB CORNER REINF.

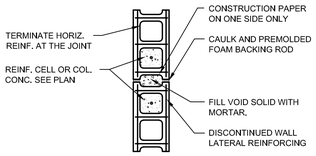

PLAN VIEW

NOTES :

1.- SAW CUT BOND BEAMS, TIE BEAMS 1" DEEP TO CONTINUE WALL CONTROL JOINT TO TOP OF WALL.

2.- CONTROL JOINT SPACING IS NOT TO EXCEED 30'-0"o.c. IN WALLS WITH MORE THAN 30'-0" OF UNINTERRUPTED MASONRY. REFER TO DWG'S. FOR ADDITIONAL SPECIFIED LOCATIONS AS NOTED THUS (WCJ).

3.- CONTINUE ALL BOND BEAMS, TIE BEAMS REINF. THROUGH THE JOINT.

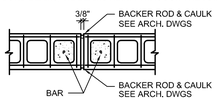

ALTERNATE METHOD

CMU WALL CONTROL JOINT (WCJ) DETAIL

N.T.S.

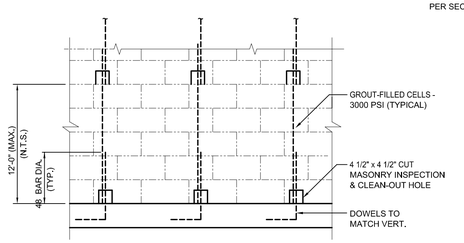

TYPICAL MASONRY FILLED CELL DETAIL

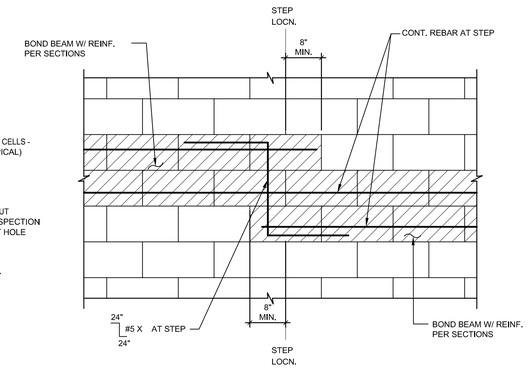

BOND BEAM STEP DETAIL

NOTES:

1. WHERE HEIGHT OF MASONRY WALL SEGMENT EXCEEDS 12'-0", INTERMEDIATE BOND BEAM IS REQUIRED.
2. BOND BEAM REINFORCEMENT MUST BE CONT. HOOK BARS INTO REINFORCED JAMB AT WALL OPENINGS.
3. OMIT BOND BEAMS WHERE IT COINCIDES WITH OPENING HEADERS (LINTELS/BEAMS). REINFORCEMENT MUST BE CONTINUOUS AT SUCH LOCATIONS.

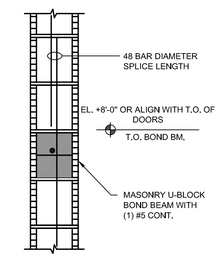

TYPICAL BOND BEAM DETAIL

N.T.S.

LATERAL BRACING (HORIZONTAL BRIDGING) FOR WALLS:

NOTE: IF NON-LOAD BRG WALLS (PARTITION WALLS) HAVE SHEATHING ON BOTH SIDES LATERAL BRACING IS NOT REQUIRED.

ENSURE BOTH STUD FLANGES ARE ATTACHED TO TOP AND BOTTOM RUNNER FLANGES. HORIZONTAL BRIDGING MUST BE INSTALLED AT SPACING NOT TO EXCEED 60" OC MEASURED VERTICALLY FOR NON-LOAD BEARING WALLS CARRYING WIND LOAD ONLY. TYPICAL FOR ALL OPTIONS BELOW.

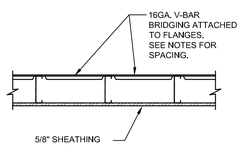

HORIZONTAL BRIDGING OPTION #1

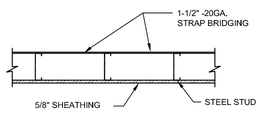

HORIZONTAL BRIDGING OPTION #2

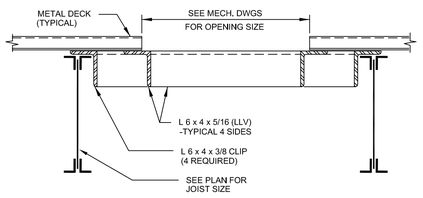

1. PROVIDE AT PERIMETER OF ALL ROOFTOP MECHANICAL UNITS AND OPENINGS AS REQUIRED.
2. SEE MECH. DWGS FOR OPENING SIZE & LOCATION.
3. PROVIDE L 3 x 3 x 5/16 AT ROOF SUMPS AND EXHAUST FANS

TYPICAL ROOF OPENING DETAIL

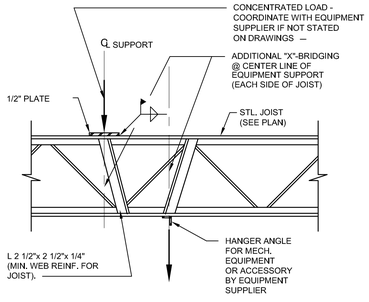

TYPICAL JOIST REINFORCING AT CONCENTRATED LOAD

N.T.S.

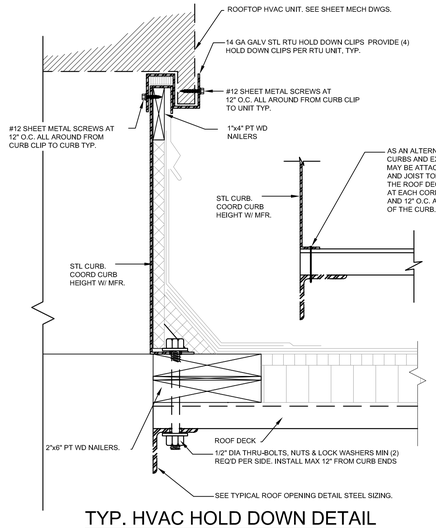

TYP. HVAC HOLD DOWN DETAIL

N.T.S.

SAFE GRAVITY LOADS FOR 8" PRECAST & PRESTRESSED U-LINTELS

CAST-CRETE		SAFE LOAD - POUNDS PER LINEAR FOOT							
LENGTH	TYPE	8U8	8F8–0B	8F12–0B	8F16–0B	8F20–0B	8F24–0B	8F28–0B	8F32–0B
			8F8–1B	8F12–1B	8F16–1B	8F20–1B	8F24–1B	8F28–1B	8F32–1B
2'–10" (34")	PRECAST	2231	3069	4605	6113	7547	8974	10394	11809
			3069	4605	6113	7547	8974	10394	11809
3'–6" (42")	PRECAST	2231	3069	3719	5163	6607	8054	9502	10951
			3069	4605	6113	7547	8974	10394	11809
4'–0" (48")	PRECAST	1966	2561	2751	3820	4890	5961	7034	8107
			2693	4605	6113	7547	8974	10394	11809
4'–6" (54")	PRECAST	1599	1969	2110	2931	3753	4576	5400	6224
			2189	4375	6113	7547 (7)	8672	10294	11809
5'–4" (64")	PRECAST	1217	1349	1438	1999	2560	3123	3686	4249
			1663	3090	5365	7547 (38)	7342 (19)	8733 (19)	10127 (19)
5'–10" (70")	PRECAST	1062	1105	1173	1631	2090	2549	3009	3470
			1451	2622	4360	7168 (46)	6036 (19)	7181 (19)	8328 (20)
6'–6" (78")	PRECAST	908	1238	2177	3480	3031	3707	4383	5061
			1238	2177	3480	5381	8360	10394 (37)	8825 (14)
7'–6" (90")	PRECAST	743	1011	1729	2632	2205	2698	3191	3685
			1011	1729	2661	3898	5681	8467 (44)	6472 (15)
9'–4" (112")	PRECAST	554	699	1160	1625	2564	3486	2818	3302
			752	1245	1843	2564	3486	4705 (37)	6390 (47)
10'–6" (126")	PRECAST	475	535	890	1247	2093	2777	2163	2536
			643	1052	1533	2093	2781	3643 (38)	4754 (45)
11'–4" (136")	PRECAST	362	582	945	1366	1846	2423	3127	4006
			582	945	1366	1846	2423	3127	4006
12'–0" (144")	PRECAST	337	540	873	1254	1684	2193	2805	3552
			540	873	1254	1684	2193	2805	3552
13'–4" (160")	PRECAST	296	471	755	1075	1428	1838	2316	2883
			471	755	1075	1428	1838	2316	2883

FL PRODUCT APPVL: FL158-R15

COPYRIGHT STATEMENT

These documents, their contents, and the ideas, designs, and concepts presented here-in are the property of ELEVEN18 Architecture and are issued only for the specific project noted on these documents. Holders of these documents that have established a mutually agreed contractual relationship with ELEVEN18 Architecture have been granted a limited license to reproduce these documents in relationship to the specific project referenced. All others are subject to US Copyright Law as defined by Title 17 of the United States Code and other regional laws as may apply. Any revisions, reproductions, modifications, or re-use of these documents without the express written consent of ELEVEN18 Architecture is prohibited by Law.

John Gutherman Jr. 2023.08.04 16:34:16-04'00'

JOHN GUTHERMAN JR. LICENSE No. 60880 STATE OF FLORIDA PROFESSIONAL ENGINEER

THIS ITEM HAS BEEN ELECTRONICALLY SIGNED AND SEALED BY JOHN GUTHERMAN JR. PE # 60880 USING A DIGITAL SIGNATURE.

PRINTED COPIES OF THIS DOCUMENT ARE NOT CONSIDERED SIGNED AND SEALED AND THE SIGNATURE MUST BE VERIFIED ON ANY ELECTRONIC COPIES.

ELEVEN 18 ARCHITECTURE
A WOMEN'S BUSINESS ENTERPRISE
FL License: AA26001884

Mailing Address:
424 E. Central Blvd. #542
Orlando, FL 32801
www.eleven18architecture.com

Physical Address:
101 E. Colonial Dr. #307
Orlando, FL 32803
407-745-5300

© Copyright 2019 ELEVEN18 ARCHITECTURE, PL
All Rights Reserved Worldwide

PROJECT NAME:

STARBUCKS TUSKAWILLA
3645 Aloma Ave.
Oviedo, FL 32765

Gutherman STRUCTURAL
GUTHERMAN STRUCTURAL INC.
130 CROWN OAK CENTRE DRIVE
LONGWOOD, FL 32750
P: 407.951.8065
LIC. # 28863

ELEVEN18 PROJECT LEAD:
Maria Lopez
407-745-5300 Ext. 106
mlopez@eleven18architecture.com

PROJECT TEAM:

REVISIONS

#	DATE	DESC.
--	06.26.2023	PERMIT SUBMITTAL
1	07.10.2023	COUNTY COMMENTS

TYPICAL DETAILS

S-3

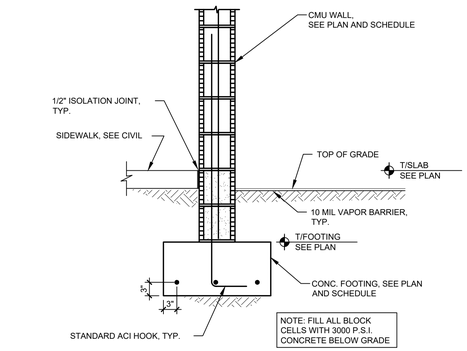

SECTION 1 (S-4)
3/4" = 1'-0"

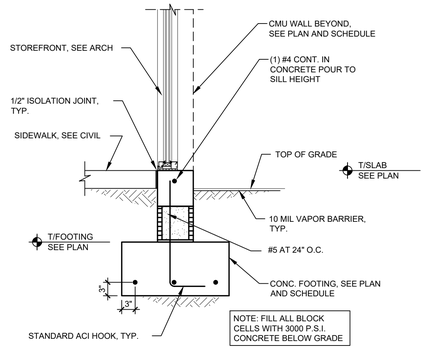

SECTION 2 (S-4)
3/4" = 1'-0"

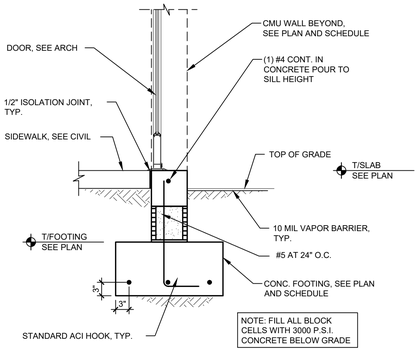

SECTION 3 (S-4)
3/4" = 1'-0"

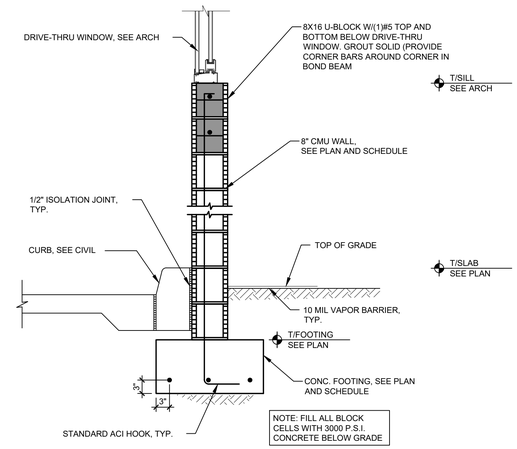

SECTION 4 (S-4)
3/4" = 1'-0"

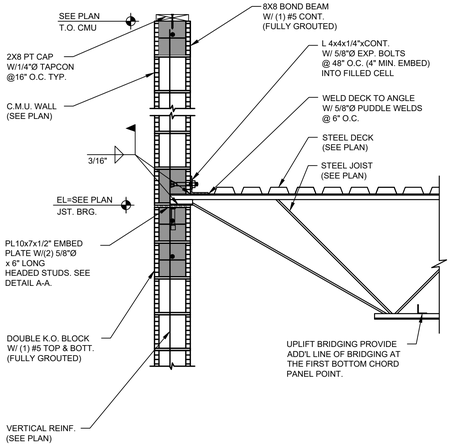

SECTION 5 (S-4)
3/4" = 1'-0"

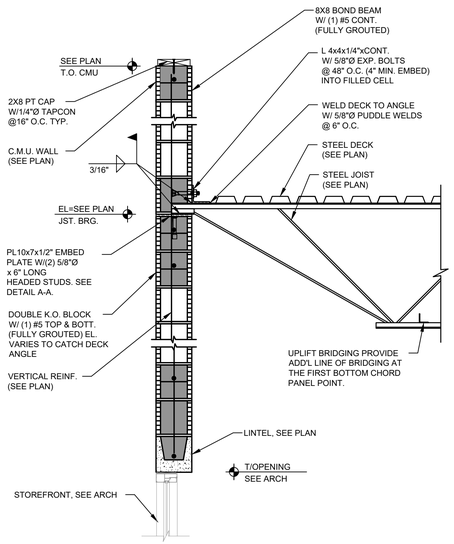

SECTION 6 (S-4)
3/4" = 1'-0"

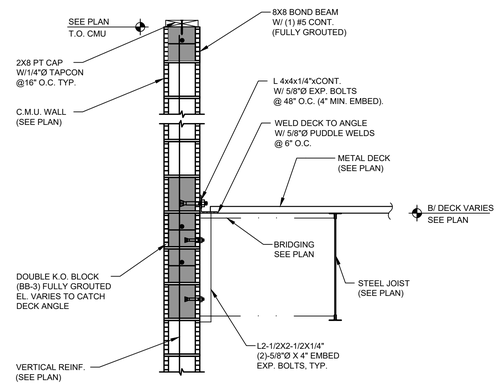

SECTION 7 (S-4)
3/4"=1'-0"

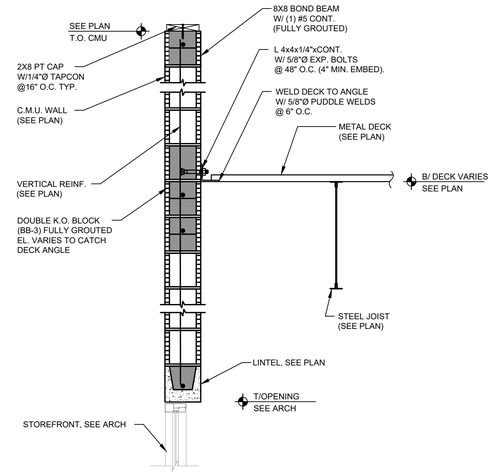

SECTION 8 (S-4)
3/4" = 1'-0"

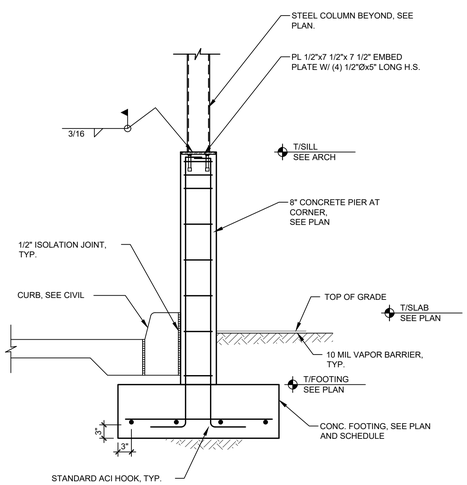

SECTION 9 (S-4)
3/4" = 1'-0"

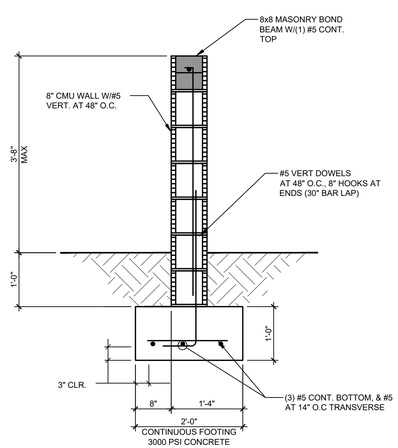

SECTION 10 (S-4)
3/4" = 1'-0"

COPYRIGHT STATEMENT

These documents, their contents, and the ideas, designs, and concepts presented here-in are the property of ELEVEN18 Architecture and are issued only for the specific project noted on these documents. Holders of these documents that have established a mutually agreed contractual relationship with ELEVEN18 Architecture have been granted a limited license to reproduce these documents in relationship to the specific project referenced. All others are subject to US Copyright Law as defined by Title 17 of the United States Code and other regional laws as may apply. Any revisions, reproductions, modifications, or re-use of these documents without the express written consent of ELEVEN18 Architecture is prohibited by Law.

John Gutherman Jr. 2023.06.26 13:13:32-04'00'

JOHN GUTHERMAN JR. LICENSE No. 60880 STATE OF FLORIDA PROFESSIONAL ENGINEER

THIS ITEM HAS BEEN ELECTRONICALLY SIGNED AND SEALED BY JOHN GUTHERMAN JR. PE # 60880 USING A DIGITAL SIGNATURE.

PRINTED COPIES OF THIS DOCUMENT ARE NOT CONSIDERED SIGNED AND SEALED AND THE SIGNATURE MUST BE VERIFIED ON ANY ELECTRONIC COPIES.

ELEVEN 18 ARCHITECTURE
A WOMEN'S BUSINESS ENTERPRISE
FL License: AA26001884

Mailing Address:
424 E. Central Blvd. #542
Orlando, FL 32801
www.eleven18architecture.com

Physical Address:
1011 E. Colonial Dr. #307
Orlando, FL 32803
407-745-5300

© Copyright 2019 ELEVEN18 ARCHITECTURE, PL
All Rights Reserved Worldwide

PROJECT NAME:

STARBUCKS TUSKAWILLA
3645 Aloma Ave.
Oviedo, FL 32765

Gutherman STRUCTURAL
GUTHERMAN STRUCTURAL INC.
130 CROWN OAK CENTRE DRIVE
LONGWOOD, FL 32750
P: 407.951.8065
LIC. # 28863

ELEVEN18 PROJECT LEAD:
Maria Lopez
407-745-5300 Ext. 106
mlopez@eleven18architecture.com

PROJECT TEAM:

REVISIONS

#	DATE	DESC.
--	06.26.2023	PERMIT SUBMITTAL

FOUNDATION & FRAMING DETAILS

S-4

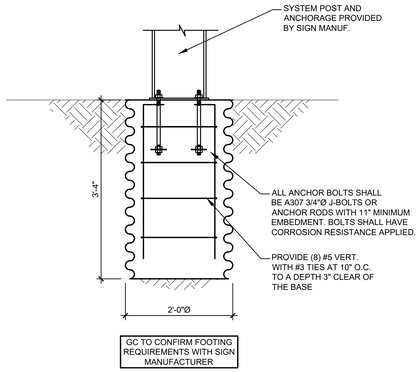

GC TO CONFIRM FOOTING REQUIREMENTS WITH SIGN MANUFACTURER

PRE MENU BOARD FOOTING

1 / S-5

3/4"=1'-0"

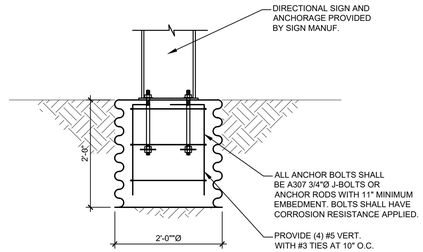

GC TO CONFIRM FOOTING REQUIREMENTS WITH SIGN MANUFACTURER

DIRECTIONAL SIGN FOOTING

2 / S-5

3/4"=1'-0"

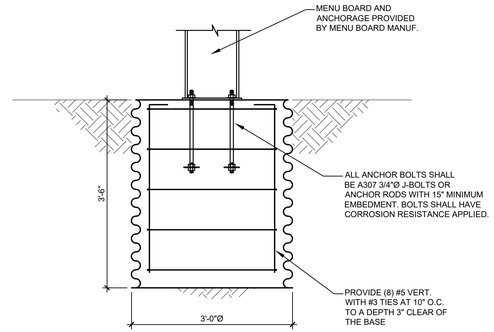

GC TO CONFIRM FOOTING REQUIREMENTS WITH SIGN MANUFACTURER

MENU BOARD FTG.

3 / S-5

3/4"=1'-0"

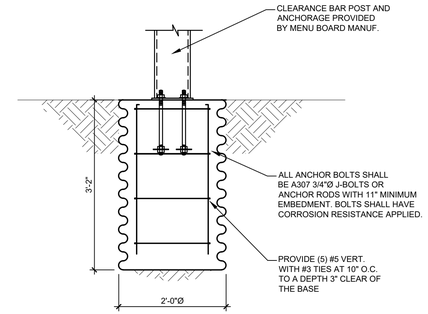

GC TO CONFIRM FOOTING REQUIREMENTS WITH SIGN MANUFACTURER

DT CLEARANCE BAR FOOTING

4 / S-5

3/4"=1'-0"

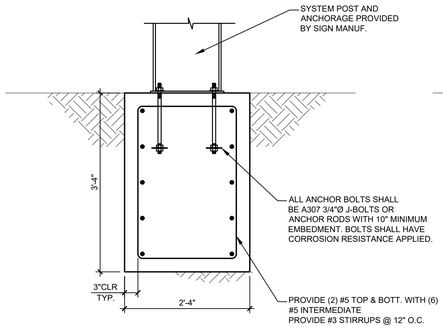

SIDE

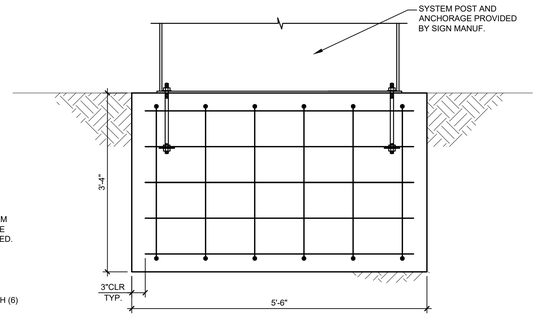

FRONT

GC TO CONFIRM FOOTING REQUIREMENTS WITH SIGN MANUFACTURER

DOS/CANOPY FOOTING

5 / S-5

3/4"=1'-0"

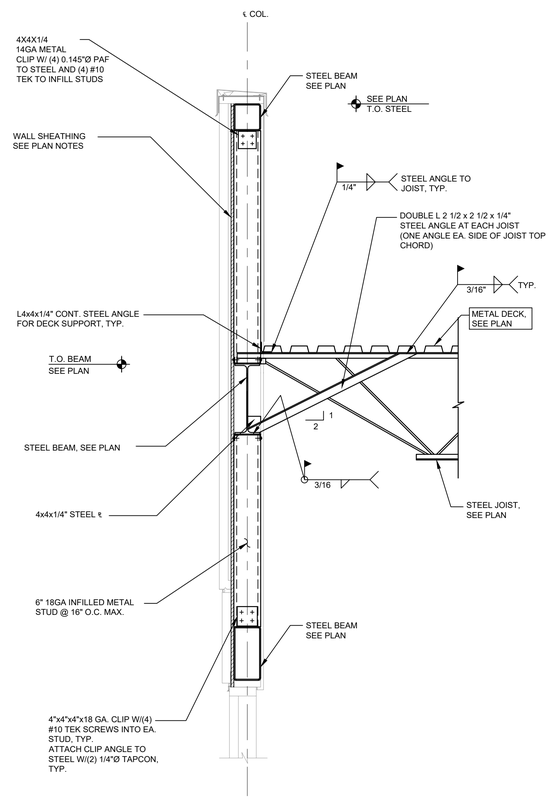

SECTION

6 / S-5

3/4"=1'-0"

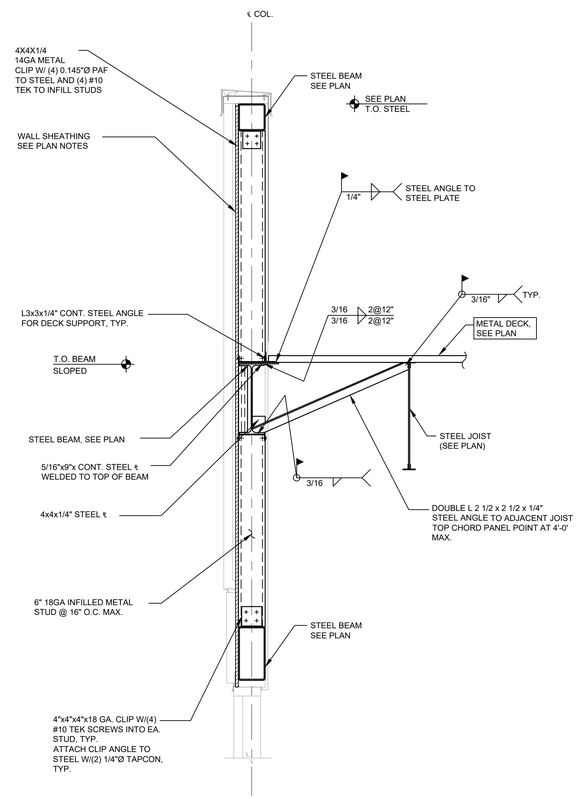

SECTION

7 / S-5

3/4"=1'-0"

COPYRIGHT STATEMENT

These documents, their contents, and the ideas, designs, and concepts presented here-in are the property of ELEVEN18 Architecture and are issued only for the specific project noted on these documents. Holders of these documents that have established a mutually agreed contractual relationship with ELEVEN18 Architecture have been granted a limited license to reproduce these documents in relationship to the specific project referenced. All others are subject to US Copyright Law as defined by Title 17 of the United States Code and other regional laws as may apply. Any revisions, reproductions, modifications, or re-use of these documents without the express written consent of ELEVEN18 Architecture is prohibited by Law.

John Gutherman Jr 2023.06.26 13:16:19-04'00'

JOHN GUTHERMAN JR. LICENSE No. 60880 STATE OF FLORIDA PROFESSIONAL ENGINEER

THIS ITEM HAS BEEN ELECTRONICALLY SIGNED AND SEALED BY JOHN GUTHERMAN JR. PE # 60880 USING A DIGITAL SIGNATURE.

PRINTED COPIES OF THIS DOCUMENT ARE NOT CONSIDERED SIGNED AND SEALED AND THE SIGNATURE MUST BE VERIFIED ON ANY ELECTRONIC COPIES.

ELEVEN 18 ARCHITECTURE
A WOMEN'S BUSINESS ENTERPRISE
FL License: AA26001884

Mailing Address:
424 E. Central Blvd. #542
Orlando, FL 32801
www.eleven18architecture.com

Physical Address:
1011 E. Colonial Dr. #307
Orlando, FL 32803
407-745-5300

© Copyright 2019 ELEVEN18 ARCHITECTURE, PL
All Rights Reserved Worldwide

PROJECT NAME:

STARBUCKS
TUSKAWILLA
3645 Aloma Ave.
Oviedo, FL 32765

Gutherman STRUCTURAL
GUTHERMAN STRUCTURAL INC.
130 CROWN OAK CENTRE DRIVE
LONGWOOD, FL 32750
P: 407.951.8065
LIC. # 28863

ELEVEN18 PROJECT LEAD:
Maria Lopez
407-745-5300 Ext. 106
mlopez@eleven18architecture.com

PROJECT TEAM:

REVISIONS

#	DATE	DESC.
--	06.26.2023	PERMIT SUBMITTAL

FOUNDATION & FRAMING DETAILS

S-5

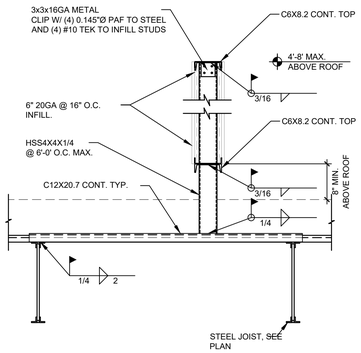

SECTION 1 / S-6

3/4"=1'-0"

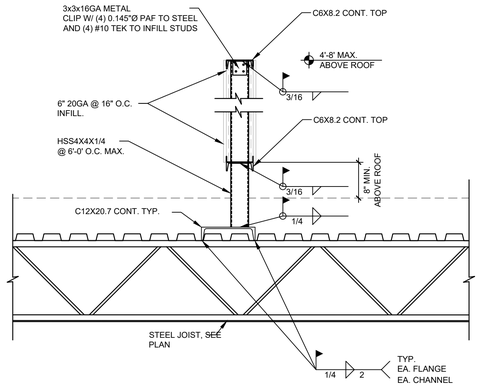

SECTION 2 / S-6

3/4"=1'-0"

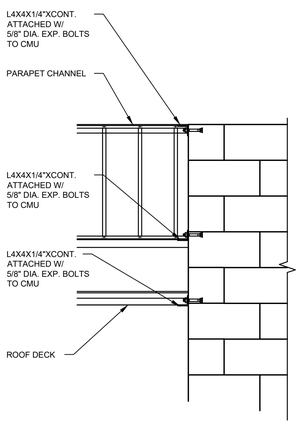

SECTION 4 / S-6

3/4"=1'-0"

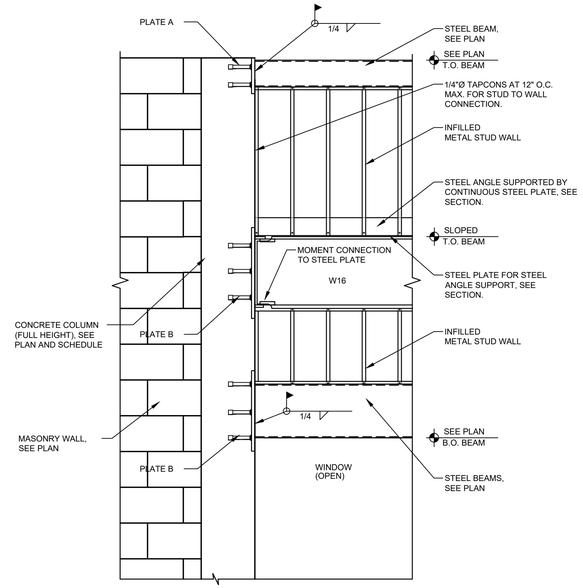

SECTION 3 / S-6

3/4" = 1'-0"

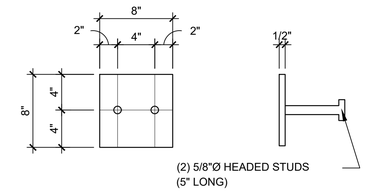

PLATE "A"

N.T.S

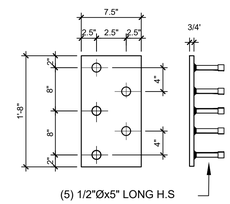

PLATE "B"

N.T.S.

COPYRIGHT STATEMENT

These documents, their contents, and the ideas, designs, and concepts presented here-in are the property of ELEVEN18 Architecture and are issued only for the specific project noted on these documents. Holders of these documents that have established a mutually agreed contractual relationship with ELEVEN18 Architecture have been granted a limited license to reproduce these documents in relationship to the specific project referenced. All others are subject to US Copyright Law as defined by Title 17 of the United States Code and other regional laws as may apply. Any revisions, reproductions, modifications, or re-use of these documents without the express written consent of ELEVEN18 Architecture is prohibited by Law.

John Gutherman Jr. 2023.06.26 13:14:00-04'00'

JOHN GUTHERMAN JR. LICENSE No. 60880 STATE OF FLORIDA PROFESSIONAL ENGINEER

THIS ITEM HAS BEEN ELECTRONICALLY SIGNED AND SEALED BY JOHN GUTHERMAN JR. PE # 60880 USING A DIGITAL SIGNATURE.

PRINTED COPIES OF THIS DOCUMENT ARE NOT CONSIDERED SIGNED AND SEALED AND THE SIGNATURE MUST BE VERIFIED ON ANY ELECTRONIC COPIES.

ELEVEN 18 ARCHITECTURE

A WOMEN'S BUSINESS ENTERPRISE

FL License: AA26001884

Mailing Address:
424 E. Central Blvd. #542
Orlando, FL 32801
www.eleven18architecture.com

Physical Address:
1011 E. Colonial Dr. #307
Orlando, FL 32803
407-745-5300

© Copyright 2019 ELEVEN18 ARCHITECTURE, PL
All Rights Reserved Worldwide

PROJECT NAME:

STARBUCKS
TUSKAWILLA
3645 Aloma Ave.
Oviedo, FL 32765

Gutherman STRUCTURAL

GUTHERMAN STRUCTURAL INC.
130 CROWN OAK CENTRE DRIVE
LONGWOOD, FL 32750
P: 407.951.8065
LIC. # 28863

ELEVEN18 PROJECT LEAD:
Maria Lopez
407-745-5300 Ext. 106
mlopez@eleven18architecture.com

PROJECT TEAM:

REVISIONS		
#	DATE	DESC.
--	06.26.2023	PERMIT SUBMITTAL

FOUNDATION
& FRAMING
DETAILS

S-6

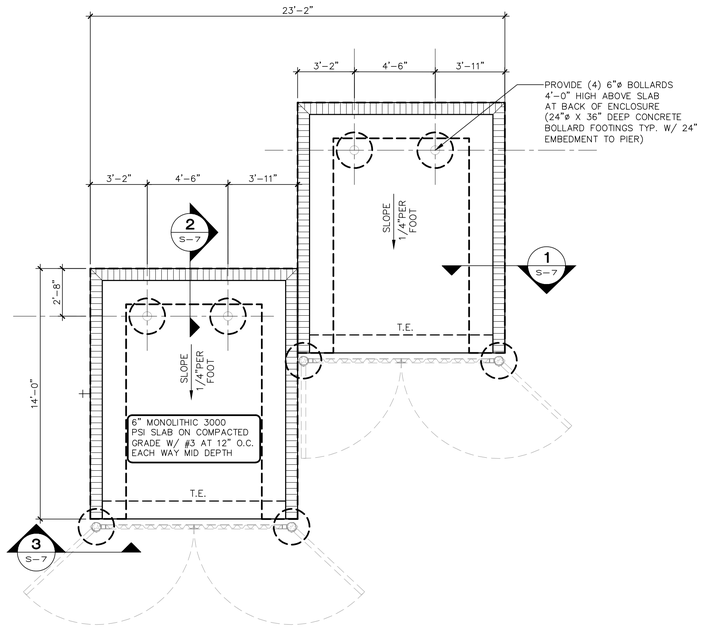

DUMPSTER DETAIL

1/4" = 1'-0"

FOUNDATION NOTES:

1. ELEV. ±0'-0" IS REFERENCE ONLY. SEE CIVIL FOR TRUE NAVD ELEVATION.
2. VERIFY SLOPES AND STEPS WITH ARCH'L PRIOR TO CONSTRUCTION.
3. PROVIDE SLAB CONTROL JOINTS AT 12 FEET ON CENTER MAX.
4. T.E. INDICATES THICKENED EDGE SEE DETAIL THIS SHEET.
5. DENOTES 8" CMU WALL, SEE SECTION FOR WALL REINFORCEMENT INFORMATION.

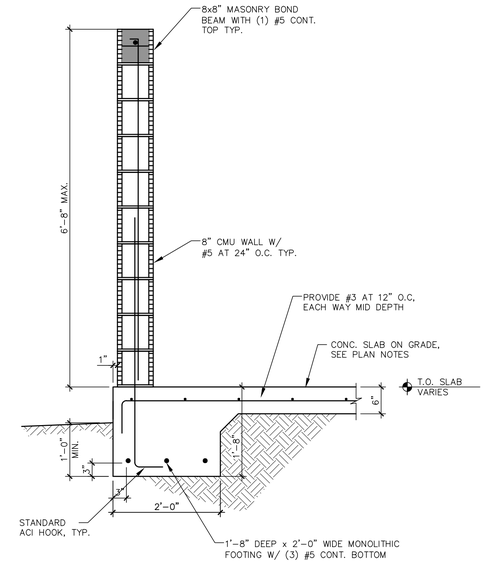

SECTION 1 / S-7

3/4" = 1'-0"

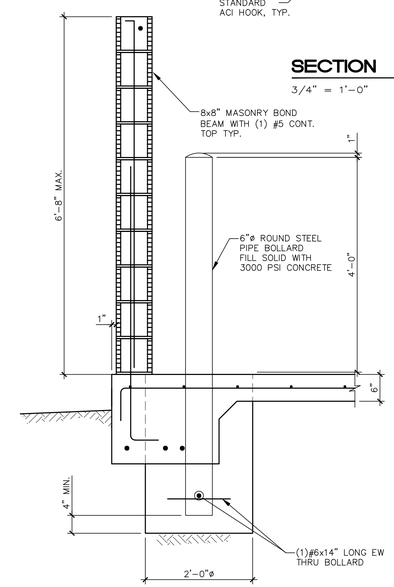

BOLLARD INTEGRAL WITH FOOTING DETAIL

SECTION 2 / S-7

3/4" = 1'-0"

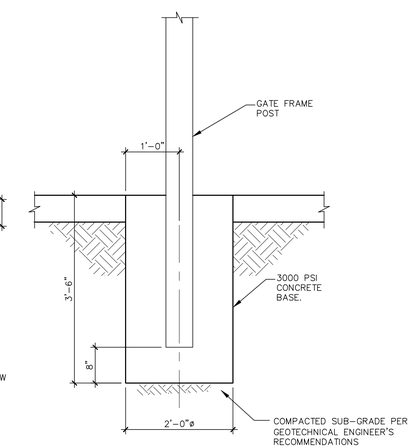

TYPICAL GATE POST DETAIL

SECTION 3 / S-7

3/4" = 1'-0"

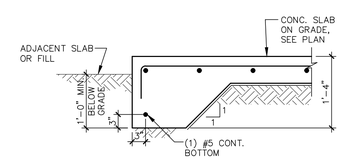

THICKENED EDGE (T.E.)

N.T.S.

COPYRIGHT STATEMENT

These documents, their contents, and the ideas, designs, and concepts presented here-in are the property of ELEVEN18 Architecture and are issued only for the specific project noted on these documents. Holders of these documents that have established a mutually agreed contractual relationship with ELEVEN18 Architecture have been granted a limited license to reproduce these documents in relationship to the specific project referenced. All others are subject to US Copyright Law as defined by Title 17 of the United States Code and other regional laws as may apply. Any revisions, reproductions, modifications, or re-use of these documents without the express written consent of ELEVEN18 Architecture is prohibited by Law.

John Gutherman Jr. 2023.06.26 13:14:32-04'00'

JOHN GUTHERMAN JR. LICENSE No. 60880 STATE OF FLORIDA PROFESSIONAL ENGINEER

THIS ITEM HAS BEEN ELECTRONICALLY SIGNED AND SEALED BY JOHN GUTHERMAN JR. PE # 60880 USING A DIGITAL SIGNATURE.

PRINTED COPIES OF THIS DOCUMENT ARE NOT CONSIDERED SIGNED AND SEALED AND THE SIGNATURE MUST BE VERIFIED ON ANY ELECTRONIC COPIES.

ELEVEN 18 ARCHITECTURE

A WOMEN'S BUSINESS ENTERPRISE

FL License: AA26001884

Mailing Address:
424 E. Central Blvd. #542
Orlando, FL 32801
www.eleven18architecture.com

Physical Address:
101 E. Colonial Dr. #307
Orlando, FL 32803
407-745-5300

© Copyright 2019 ELEVEN18 ARCHITECTURE, PL
All Rights Reserved Worldwide

PROJECT NAME:

STARBUCKS TUSKAWILLA

3645 Aloma Ave.
Oviedo, FL 32765

GUTHERMAN STRUCTURAL INC.
130 CROWN OAK CENTRE DRIVE
LONGWOOD, FL 32750
P: 407.951.8065
LIC. # 28863

ELEVEN18 PROJECT LEAD:
Maria Lopez
407-745-5300 Ext. 106
mlopez@eleven18architecture.com

PROJECT TEAM:

REVISIONS		
#	DATE	DESC.
--	06.26.2023	PERMIT SUBMITTAL

DUMPSTER ENCLOSURE

S-7

DX ROOFTOP UNIT SCHEDULE

UNIT TAG	NOMINAL CAPACITY TONS	MAX ESP (IN-H2O)	INDOOR FAN HP	SA (CFM)	OA (CFM)	EAT DB/WB	LAT DB/WB	TC (MBH)	SC (MBH)	HEATER KW-STEPS	V/PH	MCA/MOCP	COMPRESSOR (No. – RLA)	COND FAN (No. – FLA)	MIN EER	WEIGHT (LBS.)	MANUFACTURER	REMARKS
RTU-1	10	0.8	2.75	4000	340	76.6/63.8	55/54.5	120	90	20.3-2	208/3	81/90	2-19.6	1-2.7	12.4	1132	TRANE THC120	1-11
RTU-2	10	0.8	2.75	4000	420	76.9/64.2	55/54.5	120	90	20.3-2	208/3	81/90	2-19.6	1-2.7	12.4	1132	TRANE THC120	1-11

REMARKS:

1. PROVIDE 14" ROOF CURB.
2. PROVIDE PROGRAMMABLE THERMOSTAT WITH NIGHT SETBACK.
3. PROVIDE LOW AMBIENT COOLING TO 40°F.
4. PROVIDE OUTSIDE AIR HOOD W/LOW LEAKAGE MOTORIZED DAMPERS AND COIL GUARDS.
5. PROVIDE WITH MINIMUM 1 YEAR MANUFACTURER'S WARRANTY.
6. PROVIDE THRU CURB ELECTRICAL.
7. PROVIDE DUAL SPEED EVAPORATOR FAN.
8. PROVIDE (1) EXTRA SET OF FILTERS WHICH WILL BE REPLACED 2-WEEKS AFTER CERTIFICATE OF OCCUPANCY IS SUBMITTED. FILTER REPLACEMENT SHALL BE INCLUDED WITHIN THIS PROJECT'S BID.
9. ACCEPTABLE MFR'S: TRANE, JCI, CARRIER, DAIKIN, LENNOX.
10. PROVIDE UNIT WITH FLOAT SWITCH PER FBCM 307.2.3.
11. PROVIDE ECONOMIZER WITH ENTHALPY CONTROLS

PROVIDE / INSTALL

DISCONNECTS	DIV-26	EXTERNAL POWER	DIV-26
THERMOSTATS	DIV-23	SMOKE DETECTORS	DIV-23*
HUMIDISTAT	NONE	ROOF CURBS	DIV-23
CONTROL WIRE	DIV-23		

* PROVIDED BY DIV. 23, WIRED BY DIV. 26.

FAN SCHEDULE

TAG	SERVICE	CFM	SP (IN-H2O)	TYPE	HP	VOLTAGE	DRIVE	MAX. SONES	MANUFACTURER & MODEL NUMBER	REMARKS
EF-1	TLT. EXHAUST	600	0.5	CLG. EXH.	1/10	115/1/60	DIRECT	9.0	GREENHECK G-95-VG	1, 2, 3, 4

REMARKS:

1. PROVIDE GRILLE & WALL CAP.
2. PROVIDE WITH AUTOMATIC BACKDRAFT DAMPER AT OUTLET.
3. PROVIDE A SPEED CONTROLLER ABOVE CEILING FOR BALANCING.
4. BUILDING TIMER FOR CONTINOUS OPERATION DURING OCCUPIED HOURS.

VENTILATION AIR SCHEDULE

SYSTEM	AREA SERVED	AREA (SF)	CFM/SF	AREA OA RATE (CFM)	# OF OCCUPANTS	CFM/ PERSON	PEOPLE OA RATE CFM	TOTAL OA RATE (CFM)	OA RATE PROVIDED (CFM)
RTU-1	KITCHEN	540	0.12	65	11	7.5	83	148	340
	DINING	545	0.18	98	12	7.5	90	188	
RTU-2	DINING	1251	0.18	225	26	7.5	195	420	420
						TOTAL EXH. = 600			760
						BUILDING PRESSURIZATION =			+160 CFM

PER ASHRAE 62.1

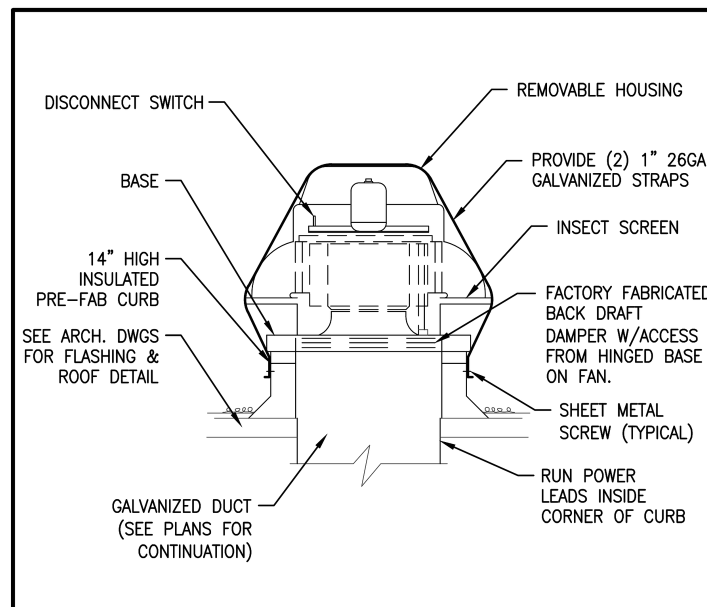

CENTRIFUGAL ROOF FAN

NTS

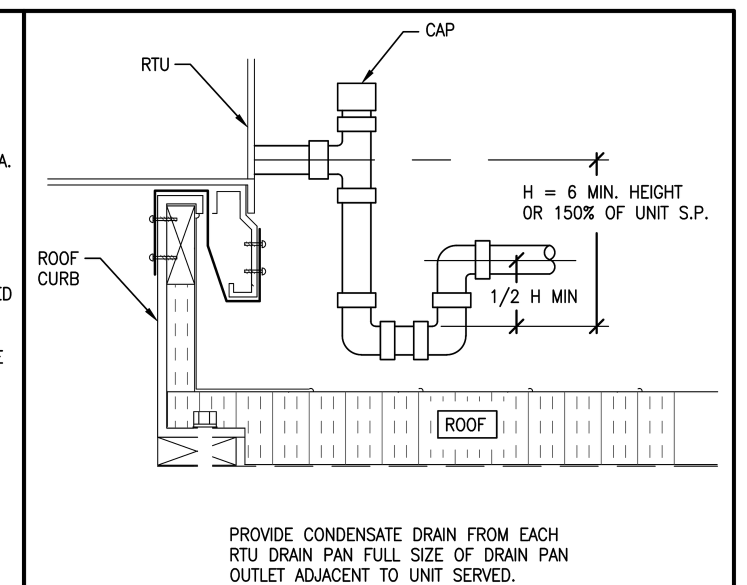

PROVIDE CONDENSATE DRAIN FROM EACH RTU DRAIN PAN FULL SIZE OF DRAIN PAN OUTLET ADJACENT TO UNIT SERVED.

P-TRAP DETAIL

NTS

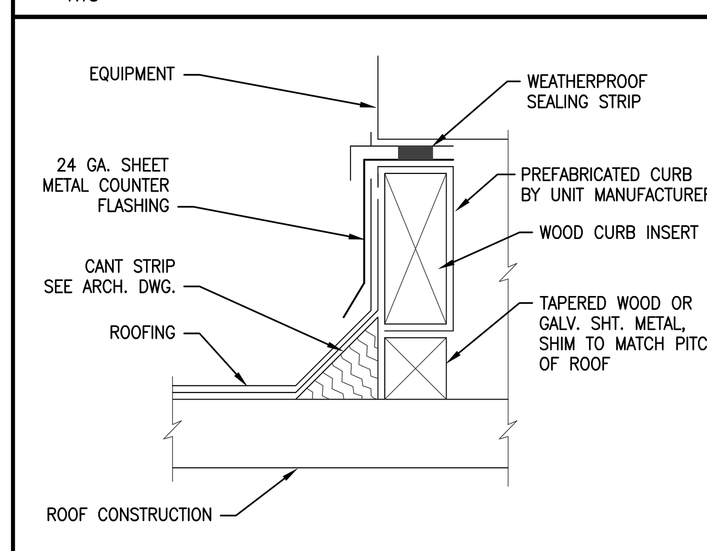

NOTE: THE DISTANCE FROM ROOF SURFACE TO BOTTOM OF THE EQUIPMENT MOUNTED ON CURB MUST BE A MINIMUM OF 14"

EQUIPMENT CURB DETAIL

NTS

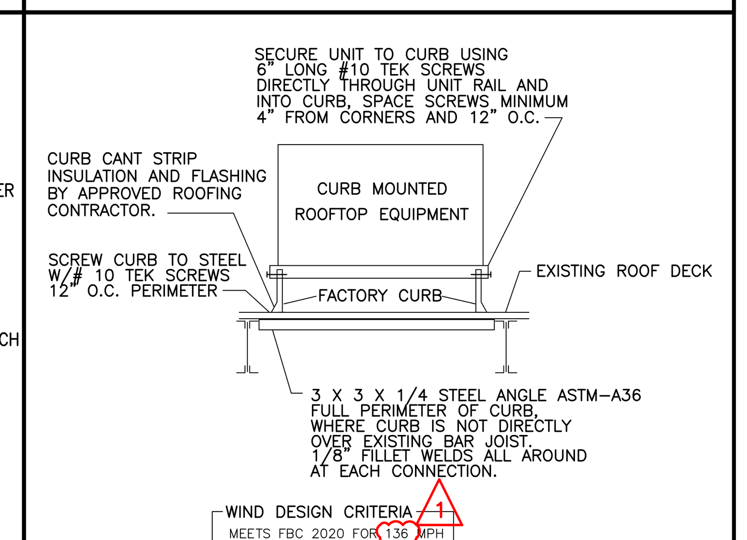

TYPICAL FOR RTUS, MAKE UP AIR UNITS & EXHAUST FANS (MINIMUM 2 SCREWS PER SIDE FOR SMALLER EQUIPMENT)

EQUIPMENT CURB DETAIL

NTS

ABBREVIATIONS

(NOT ALL ARE USED)

AC	AIR CONDITIONING
AFF	ABOVE FINISHED FLOOR
AFMS	AIR FLOW MONITORING STATION
AG	ABOVE GRADE
AHU	AIR HANDLING UNIT
AD	ACCESS DOOR
APPROX	APPROXIMATELY
BDD	BACK DRAFT DAMPER
BOD	BOTTOM OF DUCT
BTU	BRITISH THERMAL UNIT
CAP	CAPACITY
CD	CONDENSATE DRAIN
CFM	CUBIC FEET PER MINUTE
CMU	CONCRETE MASONRY UNIT
CO	CLEAN OUT
CONN	CONNECTION
CU	CONDENSING UNIT
CV	CONSTANT VOLUME
DB	DRY BULB
DG	DOOR GRILLE
DI	DIGITAL INPUT
DN	DOWN
DO	DIGITAL OUTPUT
EAT	ENTERING AIR TEMPERATURE
EER	ENERGY EFFICIENCY RATIO
EF	EXHAUST FAN
EFF	EFFECTIVENESS
EG	EXHAUST GRILLE
ELEC	ELECTRICAL
EMS	ENERGY MGMT. SYSTEM
EX	EXHAUST
ENT	ENTERING
ESP	EXTERNAL STATIC PRESSURE
F	FAHRENHEIT
FA	FILTER ACCESS
FACP	FIRE ALARM CONTROL PANEL
FCD	FLOW CONTROL DAMPER
FD	FIRE DAMPER
FLA	FULL LOAD AMPACITY
FPM	FEET PER MINUTE
FPMB	FAN POWER MIXING BOX
FS	FIRE STAT
HP	HORSEPOWER
HZ	HERTZ
IN-H2O	INCHES OF WATER
KW	KILOWATT
LAT	LEAVING AIR TEMPERATURE
LAT	LATENT
LD	LOUVERED DOOR
LRA	LOCKED ROTOR AMPS
LVG	LEAVING
MAX	MAXIMUM
MBH	1000xBTU
MCA	MINIMUM CIRCUIT AMPACITY
MISC	MISCELLANEOUS
N.I.C.	NOT IN CONTRACT
NTS	NOT TO SCALE
OA	OUTSIDE AIR
OAL	OUTSIDE AIR LOUVER
OBD	OPPOSED BLADE DAMPERS
OC	ON CENTER
PD	PRESSURE DROP
PH	PHASE
PVC	POLYVINYLCHLORIDE
RA	RETURN AIR
REF	REFRIGERANT
RG	RETURN GRILLE
RLA	RUNNING LOAD AMPS
RTU	ROOFTOP A/C UNIT
SA	SUPPLY AIR
SD	SUPPLY DIFFUSER
SEN	SENSIBLE
SG	SUPPLY GRILLE
UNCORR	UNCORRECTED
UON	UNLESS OTHERWISE NOTED
VAV	VARIABLE VOLUME
VFD	VARIABLE FREQUENCY DRIVE
WMS	WIRE MESH SCREEN

LEGEND

- SUPPLY DIFFUSER
- RETURN GRILLE
- EXHAUST GRILLE
- SUPPLY DUCT DOWN
- RETURN DUCT DOWN
- EXHAUST DUCT DOWN
- (T) THERMOSTAT
- TS REMOTE TEMPERATURE SENSOR
- SD SMOKE DETECTOR
- M MOTORIZED DAMPER
- MANUAL VOLUME DAMPER
- DUCTWORK
- FLEX DUCT
- BDD BACKDRAFT DAMPER
- FD FIRE DAMPER
- AIR FLOW DIRECTION
- 1" DOOR UNDERCUT
- POINT OF CONNECTION

IT IS THE RESPONSIBILITY OF ALL BIDDING CONTRACTORS TO ENSURE THAT EACH OF THEIR SUBCONTRACTORS RECEIVE THE NECESSARY DRAWINGS AND INFORMATION FOR BIDDING. MECHANICAL CONTRACTOR SHALL INDICATE TO ALL BIDDING VENDOR'S THAT EACH VENDOR SHALL REQUEST FROM THE BLUEPRINT COPY COMPANY FULL SIZE DRAWINGS PER MECHANICAL CONTRACTOR'S FOR WHICHEVER DRAWINGS HE/SHE DEEMS NECESSARY.

GENERAL NOTES

1. PROVIDE ALL LABOR, MATERIALS, EQUIPMENT, AND TOOLS TO PERFORM ALL WORK NECESSARY FOR THE COMPLETE EXECUTION OF THE HVAC WORK AS SHOWN ON THE DRAWINGS. PIPING SHALL ESSENTIALLY BE ROUTED AND LOCATED AS INDICATED ON THE DRAWINGS. HOWEVER, ACTUAL PLACEMENT SHALL BE VERIFIED BY CONFIRMING EXACT LOCATION OF STRUCTURES AND OTHER UTILITIES IN THE FIELD AND BY CAREFUL LAYOUT PRIOR TO EXECUTION OF THE WORK. HVAC PIPING LAYOUTS ARE GENERALLY DIAGRAMMATIC AND SHOULD NOT BE SCALED.
2. ALL DISCREPANCIES ON DRAWINGS SHALL BE BROUGHT TO THE ATTENTION OF THE ARCHITECT IN WRITING PRIOR TO SUBMISSION OF BIDS. SUBMISSION OF A BID CONSTITUTES ACCEPTANCE OF FIELD CONDITIONS.
3. SUPPORT DUCTS PER SMACNA FROM SUPPORT STRUCTURE.
4. ALL WORK SHALL BE DONE IN ACCORDANCE WITH THE FLORIDA BUILDING CODE, 2020, SMACNA FGDCS & DCS, AND NFPA 90A.
5. ROUTE ALL DUCTWORK, PIPING, ACCESSORIES AS NECESSARY TO AVOID BUILDING STRUCTURE, COMPONENTS AND LIGHTING. COORDINATE ANY TRANSITIONS MADE TO DUCTWORK WITH MAXIMUM FAN PRESSURE DROP REQUIREMENTS FROM MANUFACTURER'S RECOMMENDATIONS.
6. ALL DIMENSIONS ARE APPROXIMATE. DO NOT SCALE DRAWINGS FOR CONSTRUCTION.
7. ALL FINISHED WORK SHALL BE FREE OF DEFECTS WITH EXISTING SURFACES MAINTAINED IN THE SAME CONDITION AS ORIGINAL.
8. ALL DEBRIS SHALL BE PROPERLY DISPOSED OF OFF-SITE.
9. CONTRACTOR SHALL BE RESPONSIBLE FOR MAINTAINING FIRE RATING AND WEATHERPROOFING INTEGRITY OF ALL PIPING AND PENETRATIONS.
10. CONTRACTOR SHALL BE RESPONSIBLE FOR PROVIDING ALL NECESSARY SUPPORTING DEVICES FOR ALL ACCESSORIES INCLUDED IN CONTRACT OR HEREIN SPECIFIED OR OTHERWISE.
11. CONDENSING UNITS SHALL BE SECURED TO A 4" THICK FIBERMESH REINFORCED CONCRETE PAD PER MANUFACTURER'S INSTRUCTIONS TO MEET WIND LOADS PER CODE.
12. MECHANICAL CONTRACTOR SHALL PROVIDE A SMOKE DETECTOR IN THE SUPPLY DUCT PER FLORIDA BUILDING CODE (2020) AND NFPA-90A FOR ALL AIR HANDLING UNIT SYSTEMS > 2000 CFM OR AS APPLICABLE. ELECTRICAL CONTRACTOR TO WIRE SMOKE DETECTOR. PROVIDE A REMOTE INDICATING LIGHT AND AUDIBLE ALARM WITH A KEYED SWITCH IN THE GENERAL VICINITY OF THE SMOKE DETECTORS PER CODE REQUIREMENTS. COORDINATE WITH HVAC SCHEDULES, EXISTING DETECTORS AND EGRESS CORRIDORS.
13. CONTRACTOR SHALL PROVIDE ACCESS IN HARD CEILINGS FOR ALL FIRE DAMPERS, SPIN-IN FITTINGS AND MECHANICAL EQUIPMENT AS REQUIRED

DESIGN DATA

SUMMER OUTSIDE –	93.8/76.5 F
WINTER OUTSIDE –	38.3 F
INSIDE TEMP/RH –	75F/50%

AIR DISTRIBUTION SCHEDULE

APPROVED ALTERNATES: PRICE, TITUS, METALAIRE

TAG → SD-1, AIRFLOW → XXX: 24"x24" OR 12"x12" 3-CONE ALUMINUM SUPPLY AIR DIFFUSER. 360 DEGREE FIXED PATTERN. LOUVERED FACE. SEE ARCH FOR CEILING TYPE. PROVIDE INSULATED BACK COVER. NECK TO MATCH FLEX SIZE. WHITE FINISH. CFM INDICATED ON PLANS. BASIS OF DESIGN: PRICE MODEL ASCD.

TAG → RG-1, AIRFLOW → XXXR: 24"x24" LOUVERED FACE RETURN GRILLE, WHITE FINISH, ALUMINUM CONSTRUCTION. BASIS OF DESIGN: PRICE MODEL 630.

BRANCH DUCT SIZE:

0 – 250 CFM	– 12x6
255 – 350 CFM	– 12x8
355 – 475 CFM	– 12x10
480 – 650 CFM	– 12x12
655 – 850 CFM	– 14x12
855 – 1000 CFM	– 16x12
1005 – 1200 CFM	– 18x12

TAG → SR-1, AIRFLOW → XXX: SIDEWALL SUPPLY REGISTER, DOUBLE DEFLECTION, WHITE FINISH, ALUMINUM CONSTRUCTION. OPPOSED BLADE BALANCING DAMPER, ADJUSTABLE THROUGH FACE, BASIS OF DESIGN: PRICE MODEL 620.

CFM	NECK SIZE
0-175	8x4
180-300	10x6
305-450	12x8
455-650	16x8

TAG → EG-1, AIRFLOW → XXXE: CEILING EXHAUST GRILLE, WHITE FINISH, ALUMINUM CONSTRUCTION. NECK SIZE AS SHOWN ON DWGS. BASIS OF DESIGN: PRICE MODEL 630.

SUPPLY BRANCH & FLEX DUCT SCHEDULE

0 – 100 CFM	– 6"ø
105 – 200 CFM	– 8"ø
205 – 350 CFM	– 10"ø
355 – 550 CFM	– 12"ø
555 – 900 CFM	– 14"ø
905 – 1100 CFM	– 16"ø

NOTE:
BRANCH RUNOUT SIZE REFLECTS SUPPLY DIFFUSER NECK SIZE UNLESS OTHERWISE NOTED.

SPECIFICATIONS

1.0 BASIC MATERIAL AND METHODS

1.1 SCOPE OF WORK
PROVIDE LABOR AND MATERIALS AS REQUIRED TO PROVIDE A FULLY FUNCTIONING AND COMPLETE SYSTEM AS INDICATED ON DRAWINGS. THESE DRAWINGS ARE DIAGRAMMATIC IN NATURE AND INDICATE THE GENERAL ARRANGEMENT OF SYSTEMS AND EQUIPMENT. FINAL LOCATIONS OF EQUIPMENT SHALL BE FIELD DETERMINED. ALL DISCREPANCIES ON DRAWINGS SHALL BE BROUGHT TO THE ATTENTION OF THE ARCHITECT IN WRITING PRIOR TO SUBMISSION OF BIDS.

1.2 GENERAL AND SPECIAL CONDITIONS
ALL DIVISION 1 SPECIFICATIONS AND ARCHITECTURAL GENERAL AND SPECIAL CONDITIONS OUTLINED IN THE CONTRACT DOCUMENTS APPLY TO MECHANICAL SYSTEMS. ADDITIONALLY, WORK SHALL COMPLY WITH FLORIDA BUILDING CODE AND REGULATIONS OF THE LOCAL AUTHORITY HAVING JURISDICTION, NATIONAL FIRE PROTECTION ASSOCIATION, AND NATIONAL ELECTRICAL CODE. ALL EQUIPMENT SHALL CARRY THE UNDERWRITER'S LABORATORIES (UL) SEAL WHERE APPLICABLE.

1.3 QUALITY CONTROL
UNLESS OTHERWISE NOTED, PROVIDE NEW MATERIALS FREE OF DEFECTS. WHERE NO SPECIFIC WEIGHTS OR GRADES ARE SPECIFIED, PROVIDE MATERIALS OF AN ACCEPTED STANDARD WEIGHT AND GRADE ACCORDING TO CODE AND GOVERNING STANDARDS BY ASHRAE, SMACNA, NFPA, AND UL. INSTALL ALL EQUIPMENT, PIPING, DUCTWORK, AND CONTROLS IN ACCORDANCE WITH CODES, GOVERNING STANDARDS, AND MANUFACTURER'S RECOMMENDATIONS. FIRE PERFORMANCE CHARACTERISTICS OF INSTALLED MATERIALS SHALL BE RATED IN ACCORDANCE WITH ASTM E84. MAXIMUM FLAME SPREAD RATING SHALL BE 25 AND MAXIMUM SMOKE DEVELOPED RATING SHALL BE 50.

1.4 COORDINATION
COORDINATE ALL WORK FOR PROPER LOCATION, POWER, AND UTILITY REQUIREMENTS. SCHEDULE INSTALLATIONS TO AVOID CONFLICT AMONG TRADES. ADDITIONS TO THE CONTRACT FOR COORDINATION AMONG TRADES WILL NOT BE ALLOWED.

1.5 PENETRATIONS, CUTTING AND PATCHING
SEAL ALL PIPING AND DUCT PENETRATIONS OF WALLS IN ACCORDANCE WITH ARCHITECTURAL DRAWINGS AND SPECIFICATIONS. PIPING PENETRATIONS OF RATED FLOORS AND WALLS SHALL BE SEALED WITH FIRESTOPPING MATERIAL. FLASH ALL ROOF AND WALL PENETRATIONS IN ACCORDANCE WITH ARCHITECTURAL DRAWINGS. PROVIDE FIRE DAMPERS AT ALL RATED PENETRATIONS.

1.6 HANGERS AND SUPPORTS
PROVIDE HANGERS AND SUPPORTS FOR ALL PIPING, DUCTWORK, AND EQUIPMENT IN ACCORDANCE WITH SMACNA, MSS, ASME, AND ASHRAE STANDARDS. SUPPORT ALL ITEMS FROM INTEGRAL BUILDING STRUCTURAL MEMBERS. DO NOT HANG ITEMS FROM ROOF DECKING.

2.0 CONDENSATE PIPING AND REFRIGERANT CHASES
CONDENSATE PIPING AND REFRIGERANT CHASES SHALL BE SCH-40 PVC WITH SOLVENT WELDS, ROUTE TO THE CONDENSATE DRAIN. ALL INTERIOR PIPING SHALL BE INSULATED WITH 3/4" THICK ARMAFLEX INSULATION. EXTERIOR PIPING SHALL BE COATED WITH UV PROTECTIVE COATING.

3.0 DUCTWORK AND ACCESSORIES

3.1 AIR DUCTS – SUPPLY AND RETURN
GALVANIZED SHEET METAL WITH LOCK-FORMING QUALITY ASTM A653, G90 COATING, MILL PHOSPHATIZED FINISH FOR DUCTS EXPOSED TO VIEW. CLASS DESIGNATION SHALL BE ADEQUATE FOR PRESSURE IN DUCT SYSTEM PER TOTAL PRESSURE AS SCHEDULED FROM EQUIPMENT SHOP DRAWINGS. INSULATE SUPPLY, RETURN AND OUTSIDE AIR DUCTS WITH MINERAL FIBERGLASS BLANKETS BONDED WITH A THERMOSETTING RESIN. ASTM C 553, TYPE II, WITHOUT FACING AND WITH ALL-SERVICE JACKET MANUFACTURED FROM KRAFT PAPER, REINFORCING SCRIM, ALUMINUM FOIL, VINYL FILM. DENSITY SHALL BE MIN. 1.5 LB/CUFT. THICKNESS TO MAINTAIN A MINIMUM R-VALUE OF 6.

3.2 DEDUCTIVE ALTERNATE
PROVIDE RIGID FIBERGLASS DUCTS FOR SUPPLY AND RETURN AIR ACCORDING TO THE FOLLOWING:
RIGID FIBERGLASS DUCTS WITH INTERIOR ACRYLIC COATING, CONFORMING TO SMACNA FGSDCS GUIDELINES. R BONDED WITH THERMOSETTING RESIN. FIRE-RESISTANT, REINFORCED, FOIL-SCRIM KRAFT PAPER FACE. UL-181, UL CLOSURE, EI LABEL ON FACE. VAPOR BARRIER WITH 0.02 PERMEANCE. NOISE REDUCTION OF 0.65 MIN COEFFICIENT. 250°F RATED. CLOSURE SHALL BE WITH PRESSURE SENSITIVE TAPE, PLASTIC STRAPS AND GASKETING CONFORMING TO ENERGY CODE. (OWENS CORNING ENDURACOAT OR EQUAL). FITTINGS ARE TO CONFORM TO NAIMA STANDARDS. THICKNESS TO MAINTAIN A MINIMUM R-VALUE OF 6

3.3 AIR DUCTS – OUTSIDE AIR AND EXHAUST AIR
26 GA GALVANIZED SHEET METAL DUCT SYSTEM WITH LOCK FORMING QUALITY. (SNAP-LOCK)

3.4 VOLUME CONTROL DAMPERS
PROVIDE VOLUME CONTROL DAMPERS AT EACH BRANCH DUCT AND AS NECESSARY FOR PROPER SYSTEM BALANCING. PROVIDE FACTORY FABRICATED VOLUME CONTROL DAMPERS COMPLETE WITH REQUIRED LOCKING HARDWARE AND ACCESSORIES.

3.5 FLEXIBLE CONNECTIONS
PROVIDE FLEXIBLE CONNECTIONS AT ALL EQUIPMENT CONNECTIONS.

3.6 OUTSIDE AIR DAMPERS
PROVIDE 24V MOTORIZED OUTSIDE AIR DAMPER INTERLOCKED TO OPEN UPON AHU FAN OPERATION, OTHERWISE DAMPER NORMALLY CLOSED.

4.0 TESTING, ADJUSTING AND BALANCING
BALANCE AIRFLOWS FOR EQUIPMENT, INLETS AND OUTLETS. TEST AND BALANCE ALL SYSTEMS TO MATCH INDICATED AIRFLOWS WITHIN ± 10% OF INDICATED VALUES. BALANCE AIR INLETS AND OUTLETS AS INDICATED. ADJUST SYSTEMS WHERE NECESSARY. PROVIDE TEST AND BALANCE REPORT INDICATING ALL INTERMEDIATE AND FINAL VALUES. NEBB OR AABC CERTIFICATION OF TEST AND BALANCE PERSONNEL AND REPORT IS REQUIRED ON THIS PROJECT.

5.0 SUBMITTALS
PROVIDE 6-SETS (EACH) OF MANUFACTURER'S DATA, O&M MANUALS, ELECTRICAL DATA, DIMENSIONAL DATA AND CLEARANCES, CONNECTION DATA, COLOR SAMPLES (IF REQUIRED), AND TEST DATA FOR THE FOLLOWING:

ROOFTOP UNITS, CONTROLS, EXHAUST FANS, AIR DISTRIBUTION, T&B REPORT.

SHOP DRAWINGS MUST BE SUBMITTED AND APPROVED PRIOR TO ORDERING OF EQUIPMENT. ENGINEER WILL REQUIRE 7 WORKING DAYS TO REVIEW DRAWINGS.

THIS ITEM HAS BEEN ELECTRONICALLY SIGNED AND SEALED BY KEITH M. PRZECLAWSKI, PE ON THE DATE ADJACENT TO THE SEAL USING A SHA AUTHENTICATION CODE. PRINTED COPIES OF THIS DOCUMENT ARE NOT CONSIDERED SIGNED AND SEALED AND THE SHA AUTHENTICATION CODE MUST BE VERIFIED ON ANY ELECTRONIC COPIES.

REV#	DATE	REVISION
1	07-10-2023	COUNTY COMMENTS

CONSTRUCTION ENGINEERING GROUP
Consulting Engineers
2651 EAU GALLIE BLVD, SUITE A
MELBOURNE, FL 32935
TEL. 321.253.1221
WWW.CEGENGINEERING.COM
C.O.A. #0008097

ELEVEN 18 ARCHITECTURE
A WOMEN'S BUSINESS ENTERPRISE
License: AA26001884
424 E. Central Blvd. #542
Orlando, FL 32801
www.eleven18architecture.com
Mark Adams: 407-756-2119
Kim Day: 407-416-9960
Neke White: 407-416-9965

STARBUCKS
TUSKAWILLA
3645 ALOMA AVE, OVIEDO, FL 32765

DRAWING TITLE
MECHANICAL PLAN, SPECIFICATIONS, SCHEDULES AND DETAILS

COPYRIGHT © STATEMENT
THESE DOCUMENTS AND THEIR CONTENTS ARE THE PROPERTY OF CONSTRUCTION ENGINEERING GROUP (CEG) AND ARE ISSUED ONLY FOR THE SPECIFIC PROJECT NOTED ON THESE DOCUMENTS. ANY REVISIONS, REPRODUCTIONS OR MODIFICATIONS OF THESE DOCUMENTS WITHOUT THE EXPRESS WRITTEN CONSENT OF CEG IS PROHIBITED BY LAW.

ENGINEER OF RECORD

KEITH M. PRZECLAWSKI, PE
FL PE #82393

DATE	06-23-23
SCALE	AS NOTED
PROJ. NO. :	230069
DESIGNED BY:	KMP
DRAWN BY:	ADM
CHECKED BY:	KMP
DRAWING NO.	M1

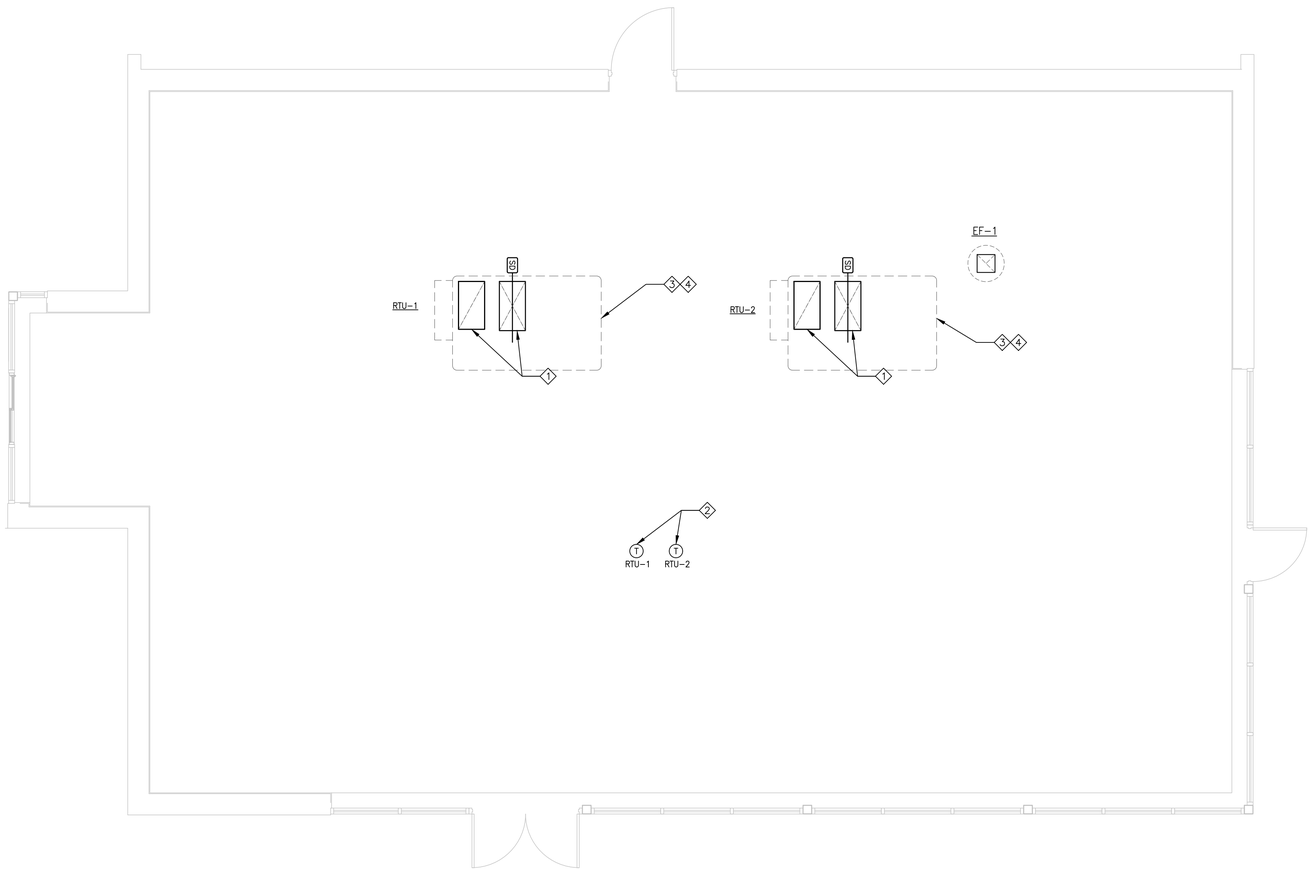

MECHANICAL PLAN

SCALE: 1/4" = 1'-0"

0 2' 4' 8' 12'

SCALE 1/4" = 1'-0"

NOTES:

1. ROUTE FULL SIZE DUCTWORK TO BOTTOM OF STRUCTURE. SEE DETAIL ON SHEET M1.
2. PROVIDE TEMPORARY THERMOSTAT TO BE LOCATED ON INTERIOR WALL DURING TENANT IMPROVEMENT BUILD OUT.
3. COORDINATE INITIAL MECHANICAL START-UP PER MANUFACTURER'S RECOMMENDATION AND PROVIDE TENANT WITH VALIDATION/COORDINATION OF MECHANICAL START-UP.
4. WIRE 150' THERMOSTAT CABLE TO UNIT, LOOPED AND LEFT IN CEILING.

THIS ITEM HAS BEEN ELECTRONICALLY SIGNED AND SEALED BY KEITH M. PRZECLAWSKI, PE ON THE DATE ADJACENT TO THE SEAL USING A SHA AUTHENTICATION CODE. PRINTED COPIES OF THIS DOCUMENT ARE NOT CONSIDERED SIGNED AND SEALED AND THE SHA AUTHENTICATION CODE MUST BE VERIFIED ON ANY ELECTRONIC COPIES.

REV#	DATE	REVISION

CONSTRUCTION ENGINEERING GROUP
Consulting Engineers
2651 EAU GALLIE BLVD, SUITE A
MELBOURNE, FL 32935
TEL. 321.253.1221
WWW.CEGENGINEERING.COM
C.O.A. #0008097

ELEVEN 18 ARCHITECTURE
A WOMEN'S BUSINESS ENTERPRISE
License: AA26001884
424 E. Central Blvd. #542
Orlando, FL 32801
www.eleven18architecture.com
Mark Adams: 407-756-2119
Kim Day: 407-416-9960
Neke White: 407-416-9965

STARBUCKS
TUSKAWILLA
3645 ALOMA AVE, OVIEDO, FL 32765

DRAWING TITLE
MECHANICAL PLAN

COPYRIGHT © STATEMENT
THESE DOCUMENTS AND THEIR CONTENTS ARE THE PROPERTY OF CONSTRUCTION ENGINEERING GROUP (CEG) AND ARE ISSUED ONLY FOR THE SPECIFIC PROJECT NOTED ON THESE DOCUMENTS. ANY REVISIONS, REPRODUCTIONS OR MODIFICATIONS OF THESE DOCUMENTS WITHOUT THE EXPRESS WRITTEN CONSENT OF CEG IS PROHIBITED BY LAW.

ENGINEER OF RECORD

KEITH M. PRZECLAWSKI, PE
FL PE #82393

DATE
06-23-23

SCALE
AS NOTED

PROJ. NO. :
230069

DESIGNED BY:
KMP

DRAWN BY:
ADM

CHECKED BY:
KMP

DRAWING NO.
M2

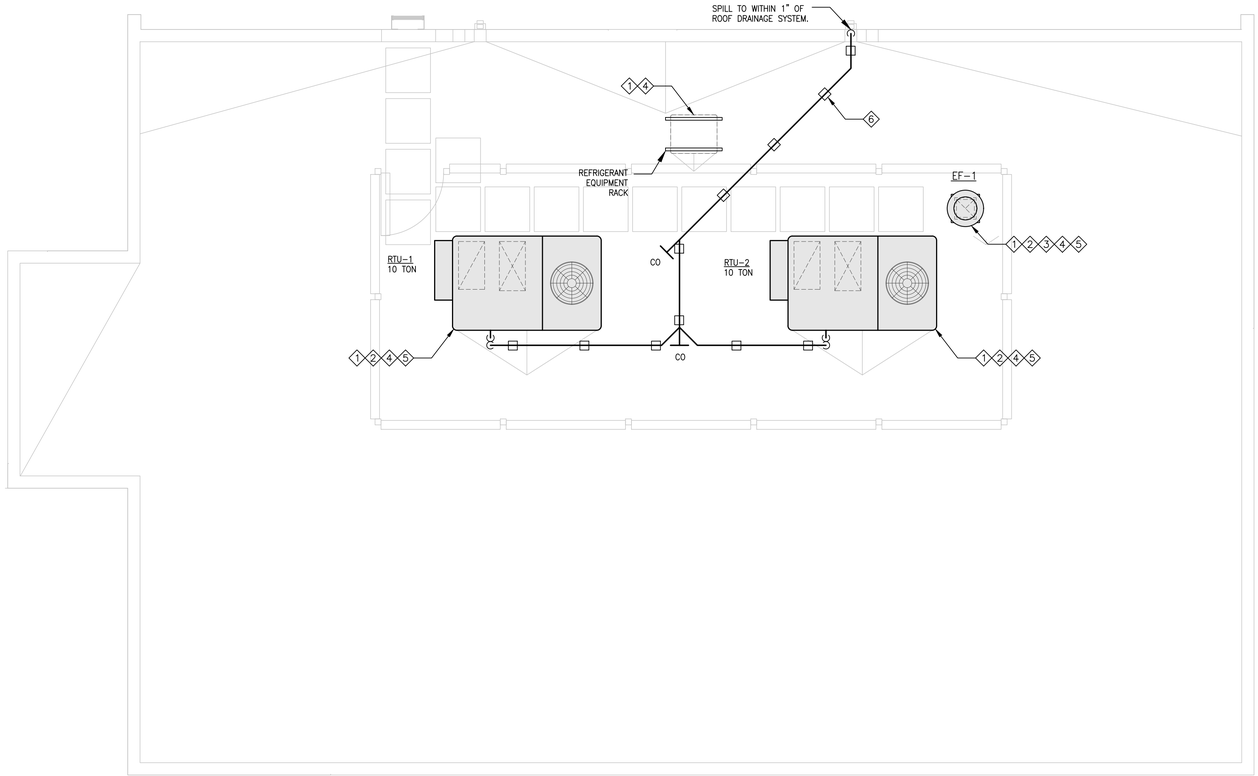

MECHANICAL PLAN - ROOF

SCALE: 1/4" = 1'-0"

0 2' 4' 8' 12'

SCALE 1/4" = 1'-0"

NOTES:

1. VERIFY ALL REQUIRED CLEARANCES FOR MAINTENANCE AS RECOMMENDED BY EQUIPMENT MANUFACTURER. INSTALL EQUIPMENT SUCH THAT ALL REQUIRED CLEARANCES ARE MAINTAINED.
2. MAINTAIN A MINIMUM DISTANCE OF 10 FEET BETWEEN BUILDING INTAKE AND EXHAUST.
3. COORDINATE FINAL FAN LOCATION WITH RESTROOMS PER TENANT CONSTRUCTION DRAWINGS.
4. COORDINATE SIZE AND LOCATION OF UNITS, CURBS, AND REFRIGERATION EQUIPMENT RACKS WITH FINAL TENANT PLANS. ENSURE THAT DUCTWORK DOES NOT CONFLICT WITH STRUCTURAL MEMBERS.
5. GENERAL CONTRACTOR MUST CONFIRM REQUIRED TONNAGE WITH STARBUCKS AND TENANT IMPROVEMENT DRAWINGS PRIOR TO ORDERING UNIT.
6. PROVIDE DURA-BLOK DBR SERIES PIPE SUPPORTS PER LEASE LETTER @ 4' O.C.. SLOPE 1/8" PER FOOT.

THIS ITEM HAS BEEN ELECTRONICALLY SIGNED AND SEALED BY KEITH M. PRZECLAWSKI, PE ON THE DATE ADJACENT TO THE SEAL USING A SHA AUTHENTICATION CODE. PRINTED COPIES OF THIS DOCUMENT ARE NOT CONSIDERED SIGNED AND SEALED AND THE SHA AUTHENTICATION CODE MUST BE VERIFIED ON ANY ELECTRONIC COPIES.

REV#	DATE	REVISION

CONSTRUCTION ENGINEERING GROUP
Consulting Engineers
2651 EAU GALLIE BLVD, SUITE A
MELBOURNE, FL 32935
TEL. 321.253.1221
WWW.CEGENGINEERING.COM
C.O.A. #0008997

ELEVEN 18 ARCHITECTURE
A WOMEN'S BUSINESS ENTERPRISE
License: AA26001884
424 E. Central Blvd. #542
Orlando, FL 32801
www.eleven18architecture.com
Mark Adams: 407.756.2119
Kim Day: 407.416.9960
Neke Witter: 407.416.9965

STARBUCKS
TUSKAWILLA
3645 ALOMA AVE, OVIEDO, FL 32765

DRAWING TITLE
MECHANICAL PLAN - ROOF

COPYRIGHT © 2019 STATEMENT
THESE DOCUMENTS AND THEIR CONTENTS ARE THE PROPERTY OF CONSTRUCTION ENGINEERING GROUP (CEG) AND ARE ISSUED ONLY FOR THE SPECIFIC PROJECT NOTED ON THESE DOCUMENTS. ANY REVISIONS, REPRODUCTIONS, AND DISTRIBUTIONS OF THE DOCUMENTS WITHOUT THE EXPRESS WRITTEN CONSENT OF CEG IS PROHIBITED BY LAW.

ENGINEER OF RECORD

KEITH M. PRZECLAWSKI, PE
FL PE #82393

DATE	06-23-23
SCALE	AS NOTED
PROJ. NO. :	230069
DESIGNED BY:	KMP
DRAWN BY:	ADM
CHECKED BY:	KMP
DRAWING NO.	M3

LIGHTING FIXTURE SCHEDULE

MK	DESCRIPTION	LAMPS QTY	LAMPS WATTS	LAMPS TYPE	DIFFUSER	MOUNTING	VOLT	MANUFACTURER	REMARKS
A	8' LED STRIP LIGHT	–	77	LED	– –	SURFACE MOUNTED	MVOLT	LITHONIA #CDS-L96-MVOLT-DM-40K-80CRI-WH	
D	EXTERIOR SURFACE DOWNLIGHT	–	12	LED	– –	SURFACE MOUNTED	MVOLT	BEGA #24-409-K35-BLK	SURFACE MOUNT UNDER CANOPY
EC	EXIT/EMERGENCY COMBO SIGN	2	9	LED	RED	UNIVERSAL	MVOLT	LITHONIA #LHQM-S-W-3-R-MVOLT	PROVIDE ARROWS AND NUMBER OF FACES AS SHOWN ON PLANS
EM	LED EMERGENCY LIGHT	–	10	LED	– –	WALL MOUNTED ABOVE DOOR	120V	EXITRONIX #NF5-WB-10L-WM-BA-G2 WITH REMOTE DRIVER	
EMC	LED EMERGENCY LIGHT	–	10	LED	– –	CANOPY MOUNTED	120V	EXITRONIX #NF5-WB-10L-BA-G2 WITH REMOTE DRIVER	COORDINATE INSTALLATION PRIOR TO INSTALLATION OF CANOPY
SLB5	POLE MOUNTED AREA LIGHT	1	90.1	LED	– –	POLE MOUNTED AT 16'-0" AFG	120V	LITHONIA #DSXO-LED-P5-40K-70CRI-BLC4-MVOLT-PIRHN-NLTAIR-DDBLX-EGS	SEE NOTES 5 AND 6
SLB6	POLE MOUNTED AREA LIGHT	1	137	LED	– –	POLE MOUNTED AT 16'-0" AFG	120V	LITHONIA #DSXO-LED-P6-40K-70CRI-BLC4-MVOLT-PIRHN-NLTAIR-DDBLX-EGS	SEE NOTES 5 AND 6
SLB7	POLE MOUNTED AREA LIGHT	1	171	LED	– –	POLE MOUNTED AT 16'-0" AFG	120V	LITHONIA #DSXO-LED-P7-40K-70CRI-BLC4-MVOLT-PIRHN-NLTAIR-DDBLX-EGS	SEE NOTES 5 AND 6
SLF5	POLE MOUNTED AREA LIGHT	1	90.1	LED	– –	POLE MOUNTED AT 16'-0" AFG	120V	LITHONIA #DSXO-LED-P5-40K-70CRI-TFTM-MVOLT-PIRHN-NLTAIR-DDBLX-EGS	SEE NOTES 5 AND 6
SLT2	POLE MOUNTED AREA LIGHT	1	90.1	LED	– –	POLE MOUNTED AT 16'-0" AFG	120V	LITHONIA #DSXO-LED-P5-40K-70CRI-T2M-MVOLT-PIRHN-NLTAIR-DDBLX-EGS	SEE NOTES 5 AND 6
SLT1	POLE MOUNTED AREA LIGHT	1	90.1	LED	– –	POLE MOUNTED AT 16'-0" AFG	MVOLT	LITHONIA #DSXO-LED-P5-40K-70CRI-T21-MVOLT-PIRHN-NLTAIR-DDBLX-EGS	
T	EXTERIOR LED WALL PACK	–	21	LED	– –	WALL MOUNTED AT 7' AFG.	MVOLT	LITHONIA #WDGE-LE3D-P0-40K-80CRI-VF	
W	EXTERIOR LED WALL SCONCE	–	6.8.	LED	– –	WALL MOUNTED AT 7' AFG.	MVOLT	BEGA #24-035-K4-BLK	

1

FIXTURE SCHEDULE NOTES:

1. FIXTURE SCHEDULE IS PROVIDED TO ESTABLISH A LEVEL OF QUALITY AND SET THE BASIS OF DESIGN FOR THIS PROJECT. ALTERNATE PACKAGES OF EQUAL OR GREATER QUALITY WILL BE ACCEPTED ONLY FROM SESCO, GENLYTE, WFLI AND LIGHTING PARTNERS OF CENTRAL FLORIDA. NO OTHERS WILL BE CONSIDERED FOR THIS PROJECT. PROVIDE EXTERIOR PHOTOMETRIC 10 DAYS PRIOR TO BID DATE FOR CONSIDERATION.
2. SUBMIT CATALOG CUT SHEETS FOR APPROVAL PRIOR TO ORDERING LIGHTING FIXTURES. SUBMIT ANY DISCREPANCIES TO THE ARCHITECT/ENGINEER PRIOR TO SUBMITTING BIDS. SUBMISSIONS OF SHOP DRAWINGS TO THE ENGINEER/ARCHITECT THAT DO NOT MEET THE ABOVE REQUIREMENTS WILL NOT BE APPROVED.
3. EMERGENCY BATTERIES SHALL BE MANUFACTURED BY BODINE, AND OR APPROVED EQUALS AND SHALL BE FACTORY INSTALLED. PROVIDE WITH AN UNCONDITIONAL NON-PRORATED 5 YEAR WARRANTY.
4. TYPE DSX SERIES LIGHTING FIXTURES SHALL BE SIDE ARM MOUNTED WITH OUT TENON ADAPTERS WHEN USING ROUND FIBERGLASS OR ALUMINUM POLES. PROVIDE TENON ADAPTOR #TSQ/ASTSQ WHEN MOUNTING DSX SERIES LIGHTING FIXTURES TO CONCRETE POLES.
5. (1) PROVIDE WITH 20' OVERALL DIRECT BURIED MATCHING ALUMINUM TAPERED POLE, INSTALLED PER MANUFACTURERS WRITTEN INSTRUCTIONS. PROVIDED POLE MINIMUM EPA LOADING SHALL EXCEED THE FIXTURE AND MOUNTING ARM COMBINED EPA PER THE LOCAL WIND REQUIREMENTS OF 160MPH, 3 SECOND GUST, EXPOSURE B PER THE FLORIDA BUILDING CODE. SUBMIT WRITTEN SIGNED AND SEALED DOCUMENTATION INDICATING COMPLIANCE.
6. PROVIDE POLE MOUNTED SITE LIGHTING WITH INTEGRAL WIRELESS CONTROLS REQUIRED TO MEET FBC C405.2.5 FOR EXTERIOR POWER REDUCTION REQUIREMENTS.

FIXTURE CIRCUITING DETAIL

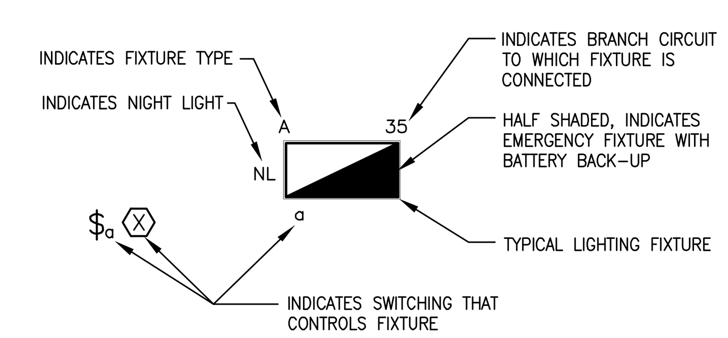

1. "NIGHT LIGHTS" WHERE INDICATED ARE TO BE WIRED UNSWITCHED. CIRCUIT USING THE SMALLEST NUMBER OF LAMPS PER FIXTURE WHEN MORE THAN ONE BALLAST IS PROVIDED PER FIXTURE. REMAINING LAMPS SHALL BE SWITCHED WITH REST OF AREA LIGHTING FIXTURES.
2. INTEGRAL EMERGENCY BATTERIES SHALL BE CONNECTED TO UNSWITCHED LIGHTING CIRCUIT SERVING ROOM WHERE FIXTURE IS LOCATED.
3. IF MORE THAN ONE SWITCH LEG IS SHOWN ADJACENT TO FIXTURE, FIXTURE SHALL BE PROVIDED WITH SECOND BALLAST FOR INSIDE-OUTSIDE LAMP SWITCHING. ALL FIXTURES WITHIN SAME AREA SHALL BE WIRED THE SAME, UNLESS OTHERWISE NOTED.

ELECTRICAL NOTES

MATERIALS AND METHODS

1. ALL WIRE SHALL BE COPPER TYPE "THHN/THWN," SOLID FOR SIZES #10 AND #12, AND STRANDED FOR #8 AND LARGER UNLESS OTHERWISE NOTED.
2. MINIMUM WIRE SIZE SHALL BE #12 AWG. FOR BRANCH CIRCUITS OVER 100' MINIMUM HOMERUN TO PANEL SHALL BE #10 AWG.
3. ALL WIRE SHALL BE INSTALLED IN CONDUIT, UNLESS OTHERWISE NOTED. MINIMUM HOMERUN SIZE SHALL BE 3/4". 1/2" CONDUIT MAY BE USED BETWEEN DEVICES. ALL CONDUIT SHALL BE RUN PARALLEL AND PERPENDICULAR TO BUILDING WALLS AND FLOORS. MINIMUM U.G. CONDUIT HOMERUN SHALL BE 3/4". MC CABLE MAY BE USED PER THE NEC, WHERE CONCEALED.
4. ALL CONDUITS INSTALLED IN DRY INTERIOR LOCATIONS SHALL BE ELECTRICAL METALLIC TUBING, UNLESS OTHERWISE NOTED.
5. ALL CONDUITS INSTALLED IN EXTERIOR LOCATIONS SHALL BE RIGID SCH.80 PVC. ALL CONDUITS INSTALLED UNDERGROUND SHALL BE RIGID SCH.40 PVC. BURIED PER NEC. ALL EXTERIOR EQUIPMENT SHALL BE CONNECTED WITH LIQUID TIGHT FLEXIBLE METAL CONDUIT AND WEATHERPROOF FITTINGS.
6. INSTALL ALL RACEWAYS, BOXES, ENCLOSURES, AND CABINETS AS INDICATED AND INSTALLED PER MANUFACTURER'S WRITTEN INSTRUCTIONS.
7. OUTLET AND SWITCH BOXES SHALL BE STEEL IN DRY LOCATIONS AND CAST ALLOY WITH THREADED HUBS IN WET OR DAMP LOCATIONS AND OR OF SPECIAL CONSTRUCTION TO SUIT SPECIFIC SITUATIONS. ALL BOXES SHALL BE RECESSED FLUSH IN WALLS AND/OR CONCEALED ABOVE CEILINGS. PROVIDE ACCESS PANELS FOR BOXES LOCATED IN NON-READILY ACCESSIBLE AREAS.
8. INSTALL COMPONENTS AND EQUIPMENT TO PROVIDE MAXIMUM POSSIBLE HEADROOM WHERE MOUNTING HEIGHTS OR OTHER LOCATION CRITERIA ARE NOT INDICATED. MAINTAIN ALL WORKING CLEARANCES AROUND EQUIPMENT AS REQUIRED BY THE N.E.C. INSTALLED PANELBOARDS WITH TOP OF TRIM AT 6'-6" ABOVE FINISHED FLOOR.
9. ALL BRANCH AND FEEDER CIRCUITS SHALL CONTAIN A GROUNDING CONDUCTOR, UNLESS OTHERWISE NOTED, AND BE SIZED AND BONDED IN ACCORDANCE WITH ARTICLE 250 OF THE NATIONAL ELECTRIC CODE. ALL GROUNDING CONDUCTORS SHALL BE COPPER, U.O.N.
10. ALL PANELBOARDS, DISCONNECT SWITCHES AND SYSTEM PANELS SHALL BE SQUARE D, GE OR EQUAL AND HAVE PLASTIC LAMINATE NAMEPLATES FOR IDENTIFYING SYSTEM FUNCTION AND CHARACTERISTICS.
11. FIRE SEAL ALL CONDUIT PENETRATIONS IN FIRE RATED WALLS AND FLOORS BACK TO INITIAL RATING. FLASH ALL CONDUIT ROOF PENETRATIONS AS REQUIRED TO PROVIDE WEATHERPROOF SEALS. COORDINATE WITH OTHER TRADES AND ROOFING CONTRACTOR. ALL PENETRATIONS IN FIRE RATED ASSEMBLIES SHALL BE PROTECTED BY APPROVED FIRE STOPPING SYSTEM IN ACCORDANCE TO SECTION 713 OF THE FBCB.
12. ALL WIRING DEVICES SHALL BE COMMERCIAL GRADE AND MANUFACTURED BY LEVITON, P&S OR HUBBELL. ALL DEVICES INSTALLED IN FINISHED AREAS SHALL BE WHITE WITH MATCHING NON-METALLIC FACEPLATES. FIELD VERIFY ACTUAL COLOR PRIOR TO ORDERING WITH OWNER OR TENANT. SWITCH AND OUTLET BOXES SHALL NOT BE INSTALLED WITHIN THE SAME STUD-CAVITY IN RATED PARTITIONS AND DEMISING WALLS. IF BACK TO BACK BOXES ARE NOT SEPARATED BY MINIMUM HORIZONTAL DISTANCE OF 24", THEN INSTALLATION OF A WALL OPENING PROTECTIVE MATERIAL (UL LISTED PUTTY PAD, INSTALLED ACCORDING TO THEIR UL CLASSIFICATION) IS REQUIRED TO MAINTAIN THE WALL RATING.
13. ALL DISCONNECT SWITCHES SHALL BE RATED HEAVY DUTY, AND NEMA 3R WHERE INSTALLED OUTDOORS.
14. PROVIDE SUPPLEMENTAL WIRE-TYPE SUPPORT OF ALL LAY-IN LIGHTING FIXTURES FROM BUILDING STRUCTURE. LIGHTING FIXTURES WEIGHING LESS THAN 10 POUNDS SHALL HAVE ONE #12 GAGE HANGER WIRE CONNECTED FROM THE LIGHTING FIXTURE TO THE STRUCTURE ABOVE. LIGHTING FIXTURE WEIGHING MORE THAN 10 POUNDS SHALL HAVE TWO #12 GAGE WIRES ATTACHED AT OPPOSING CORNERS OF THE LIGHTING FIXTURE.
15. PROVIDE NYLON PULLSTRINGS IN ALL RACEWAYS.
16. THESE ELECTRICAL PLANS AND PANEL SCHEDULES ARE BASED ON THE CONTRACTOR PROVIDING DEDICATED NEUTRALS FOR EACH 120V BRANCH CIRCUIT. MULTI-WIRE BRANCH CIRCUITS ARE NOT USED, UNLESS SPECIFICALLY NOTED.

FUNCTIONAL TESTING:

1. THE ELECTRICAL CONTRACTOR SHALL ARRANGE FOR AND OR COMPLETE FUNCTIONAL TESTING AT THE END OF THE PROJECT PRIOR TO THE FINAL INSPECTION TO ENSURE THAT LIGHTING CONTROL HARDWARE AND SOFTWARE ARE CALIBRATED, ADJUSTED, PROGRAMMED AND IN PROPER WORKING CONDITION IN ACCORDANCE WITH THE CONSTRUCTION DOCUMENTS AND MANUFACTURER'S INSTALLATION INSTRUCTIONS. WHERE REQUIRED BY THE CODE OFFICIAL, AN APPROVED PARTY INDEPENDENT FROM THE DESIGN OR CONSTRUCTION OF THE PROJECT SHALL BE RESPONSIBLE FOR THE FUNCTIONAL TESTING AND SHALL PROVIDE DOCUMENTATION TO THE CODE OFFICIAL CERTIFYING THAT THE INSTALLED LIGHTING CONTROLS MEET THE PROVISIONS OF SECTION C405.
2. WHERE OCCUPANT SENSORS, TIME SWITCHES, PROGRAMMABLE SCHEDULE CONTROLS, PHOTO SENSORS OR DAYLIGHTING CONTROLS ARE INSTALLED, THE FOLLOWING GENERAL PROCEDURES SHALL BE PERFORMED. REFER TO FBC C408.3 FOR SPECIFIC REQUIREMENTS.
   A. CONFIRM THAT THE PLACEMENT, SENSITIVITY AND TIME-OUT ADJUSTMENTS FOR OCCUPANT SENSORS YIELD ACCEPTABLE PERFORMANCE.
   B. CONFIRM THAT THE TIME SWITCHES AND PROGRAMMABLE SCHEDULE CONTROLS ARE PROGRAMMED TO TURN THE LIGHTS OFF.
   C. CONFIRM THAT THE PLACEMENT AND SENSITIVITY ADJUSTMENTS FOR PHOTO SENSOR CONTROLS REDUCE ELECTRIC LIGHT BASED ON THE AMOUNT OF USABLE DAYLIGHT IN THE SPACE AS SPECIFIED.
3. WITHIN 90 DAYS FROM THE DATE OF RECEIPT OF THE CERTIFICATE OF OCCUPANCY, THE CONTRACTOR SHALL SUBMIT TO THE BUILDING OWNER DOCUMENTATION CERTIFYING THAT INSTALLED LIGHTING CONTROLS MEET THE DOCUMENTED PERFORMANCE CRITERIA OF SECTION C405.

PROJECT COMPLETION REQUIREMENTS

1. WITHIN 30 DAYS AFTER THE DATE OF SYSTEM ACCEPTANCE, CONTRACTOR SHALL PROVIDE RECORD DRAWINGS OF THE ACTUAL INSTALLATION TO THE BUILDING OWNER, INCLUDING:
   A. A SINGLE-LINE DIAGRAM OF THE BUILDING ELECTRICAL DISTRIBUTION SYSTEM.
   B. FLOOR PLANS INDICATING LOCATION AND AREA SERVED FOR ALL DISTRIBUTION.
2. THE CONTRACTOR SHALL PROVIDE OPERATING MANUAL AND MAINTENANCE MANUALS TO THE BUILDING OWNER. THE MANUALS SHALL BE NEATLY BOUND AND ORGANIZED AND SHALL INCLUDE, AT A MINIMUM, THE FOLLOWING:
   A. SUBMITTAL DATA STATING EQUIPMENT RATING AND SELECTED OPTIONS FOR EACH PIECE OF EQUIPMENT REQUIRING MAINTENANCE.
   B. OPERATION MANUALS AND MAINTENANCE MANUALS FOR EACH PIECE OF EQUIPMENT REQUIRING MAINTENANCE. REQUIRED ROUTINE MAINTENANCE ACTIONS SHALL BE CLEARLY IDENTIFIED.
   C. NAME AND ADDRESS OF AT LEAST ONE QUALIFIED SERVICE AGENCY.

GENERAL REQUIREMENTS

1. PROVIDE ALL LABOR, MATERIALS, EQUIPMENT, AND TOOLS TO PERFORM ALL WORK NECESSARY FOR THE COMPLETE EXECUTION OF THE ELECTRICAL WORK AS SHOWN ON THE DRAWINGS.
2. PROVIDE WORK NOT SPECIFICALLY SHOWN OR SPECIFIED, YET REQUIRED TO INSURE PROPER AND COMPLETE OPERATIONS OF ALL SYSTEMS AND TO SATISFY THE DESIGN INTENT IN THE WORK AND TO COMPLY WITH ALL APPLICABLE CODES AND REGULATIONS.
3. LABOR FOR THE INSTALLATION OF MATERIALS AND EQUIPMENT FURNISHED UNDER THE ELECTRICAL CONTRACTORS' SCOPE OF WORK SHALL BE PERFORMED BY EXPERIENCED MECHANICS OF THE PROPER TRADE AND ALL WORKMANSHIP SHALL BE FIRST CLASS AND SHALL BE IN COMPLIANCE WITH THE SPECIFIC REQUIREMENTS OF THE CONTRACT DRAWINGS.
4. ALL DISCREPANCIES ON DRAWINGS SHALL BE BROUGHT TO THE ATTENTION OF THE ARCHITECT IN WRITING PRIOR TO SUBMISSION OF BIDS. SUBMISSION OF A BID CONSTITUTES ACCEPTANCE OF FIELD CONDITIONS.
5. ALL DIVISION 1 SPECIFICATIONS AND ARCHITECTURAL GENERAL AND SPECIAL CONDITIONS OUTLINED IN THE CONTRACT DOCUMENTS SHALL APPLY TO ELECTRICAL SYSTEMS.
6. ALL WORK SHALL BE IN ACCORDANCE WITH THE LATEST ADOPTED EDITION OF THE FOLLOWING CODES AND STANDARDS:
   - FLORIDA BUILDING CODE 7TH EDITION
   - NATIONAL FIRE PROTECTION ASSOCIATION, (NFPA)
   - NATIONAL ELECTRICAL CODE, 2017 (NEC)
   - NATIONAL ELECTRICAL MANUFACTURERS ASSOCIATION, (NEMA)
   - NATIONAL ELECTRICAL CONTRACTORS ASSOCIATION, (NECA)
   - AMERICAN NATIONAL STANDARDS INSTITUTE, (ANSI)
   - UNDERWRITERS LABORATORIES, (UL)
   - ALL LOCAL CODES, ORDINANCES, REGULATIONS
   - LOCAL POWER COMPANY STANDARDS
   - THE AUTHORITY HAVING JURISDICTION.
7. ALL MATERIALS PROVIDED BY THE CONTRACTOR SHALL BE NEW AND FREE OF DEFECTS AND SHALL BE UL LISTED FOR THE INTENDED APPLICATION.
8. THE ELECTRICAL DRAWINGS ARE NOT TO BE SCALED. WHERE SPECIFIC DETAILS AND DIMENSIONS FOR ELECTRICAL WORK ARE NOT SHOWN ON THE DRAWINGS, THE CONTRACTOR SHALL TAKE MEASUREMENTS AND MAKE LAYOUTS AS REQUIRED FOR FOR THE PROPER INSTALLATION AND COMPLETION OF THE WORK.
9. CONTRACTOR SHALL OBTAIN AND FURNISH ALL PERMITS, AND ARRANGE FOR ALL REQUIRED INSPECTIONS.
10. CONTRACTOR SHALL INSPECT SITE FOR FIELD VERIFICATION OF ALL ASPECTS OF THE PROJECT PRIOR TO BIDDING.
11. THE CONTRACT DRAWINGS INDICATE THE GENERAL ARRANGEMENT OF CIRCUITS AND OUTLETS, LOCATION OF SWITCHES, PANELBOARDS, CONDUITS, AND OTHER WORK. FIELD VERIFY ALL DIMENSIONS PRIOR TO INSTALLATION OF WORK.
12. ALL DISCONNECT SWITCHES AND STARTERS FOR THE MECHANICAL EQUIPMENT SHALL BE SIZED AND PROVIDED BY THE ELECTRICAL CONTRACTOR AND INSTALLED AND CIRCUITED BY THE ELECTRICAL CONTRACTOR, UNLESS OTHERWISE NOTED. INSTALL SWITCHES IN ACCESSIBLE LOCATIONS. PRIOR TO INSTALLATION OF ANY ELECTRICAL WORK RELATED TO NEW HVAC CIRCUITS, THE ELECTRICAL CONTRACTOR SHALL REVIEW THE MECHANICAL SHOP DRAWINGS FOR ACTUAL CIRCUIT REQUIREMENTS.
13. THE ELECTRICAL CIRCUITS, COMPONENTS, AND CONTROLS ARE SELECTED AND SIZED FOR THE EQUIPMENT SPECIFIED AND OR SHOWN. IF SUBSTITUTIONS AND/OR EQUIVALENT EQUIPMENT ARE FURNISHED, IT SHALL BE THE RESPONSIBILITIES OF ALL PARTIES CONCERNED, INVOLVED IN AND FURNISHING THE SUBSTITUTE AND/OR EQUIVALENT EQUIPMENT TO VERIFY AND COMPARE THE ELECTRICAL CHARACTERISTICS OF THAT FURNISHED TO THAT SHOWN.
14. FIELD COORDINATE EXACT ELECTRICAL CONNECTION POINTS TO EQUIPMENT PRIOR TO ROUGH IN OF ELECTRICAL COMPONENTS.
15. FIELD DETERMINE EXACT MOUNTING LOCATION OF DUCT MOUNTED SMOKE DETECTORS. INSTALL PER NFPA AND MANUFACTURER'S WRITTEN INSTRUCTIONS.
16. COORDINATE MOUNTING LOCATIONS OF LIGHTING SWITCHES, F/A DEVICES, TV, DATA/TEL OUTLETS, AND RECEPTACLES WITH MILLWORK, PRIOR TO ROUGH-IN.
17. COORDINATE MOUNTING LOCATIONS OF RECEPTACLE AND TV AND DATA OUTLETS WITH OWNER REPRESENTATIVE PRIOR TO ROUGH-IN. REFER TO ARCHITECTURAL PLANS FOR WALL CONSTRUCTION TYPES.
18. PROVIDE A 120V RECEPTACLE AND SWITCHED LIGHTING OUTLET WITH LAMP WITHIN 3 FT. OF THE SERVICING SIDE OF ALL ELECTRICALLY OPERATED MECHANICAL EQUIPMENT INSTALLED IN ATTICS AND CRAWL SPACES.
19. THE CONTRACTOR SHALL PROVIDE ALL CHANNEL AND ANGLE SUPPORTING SYSTEMS, HANGERS, ANCHORS, SLEEVES, BRACKETS, FABRICATED ITEMS, AND HARDWARE AS REQUIRED TO PROVIDE SECURE SUPPORT, PER N.E.C., FOR ALL ELECTRICAL COMPONENTS FROM THE BUILDING STRUCTURE.
20. SPECIFIED CONDUIT RUNS ARE SHOWN DIAGRAMMATICALLY ONLY, FIELD COORDINATE ACTUAL ROUTING OF CONDUITS.
21. PROVIDE TEMPORARY LIGHTING AND POWER AS REQUIRED FOR ALL SUBS AND TO SUIT JOB CONDITIONS.
22. ALL MOUNTING HEIGHTS INDICATED ARE MEASURED FROM THE FINISHED FLOOR INSIDE, OR FINISHED GRADE OUTSIDE.
23. WHERE CONCEALED BY INACCESSIBLE FINISHES, PROVIDE ACCESS DOORS TO ELECTRICAL JUNCTION AND PULL BOXES, CONTROL DEVICES, AND EQUIPMENT, DISCONNECT SWITCHES AND ALL OTHER ITEMS REQUIRING MAINTENANCE, ADJUSTING, OR SERVICE. COORDINATE LOCATION OF ACCESS PANELS WITH ARCHITECT AND ALL AFFECTED TRADES.
24. PROVIDE FINAL CLEANUP AND CONDUCT FIELD TESTS AFTER INSTALLATION OF ALL ELECTRICAL WORK. ADJUST ITEMS TO THE SATISFACTION OF THE OWNER, ARCHITECT, AND ENGINEER. LEAVE PANELBOARD INTERIOR CLEAN AND FREE FROM CONSTRUCTION DEBRIS. NEATLY DRESS ALL WIRING, AND RE-TIGHTEN ALL TERMINATIONS PER MANUFACTURERS' RECOMMENDATIONS.
25. TEST RESISTANCE OF GROUNDING ELECTRODE SYSTEM TO EARTH TO ACHIEVE A MINIMUM OF 10 OHMS, PROVIDE ADDITIONAL ELECTRODE TO OBTAIN ADEQUATE READING.
26. MAINTAIN ON THE JOBSITE IN GOOD CONDITION ONE SET OF UP TO DATE AS-BUILT ELECTRICAL DRAWINGS. PROGRESSIVELY, NEATLY, LEGIBLY AND EXACTLY RECORD ON THESE DRAWINGS THE LOCATION OF ALL CONCEALED CONDUIT RUNS AND ALL WORK WHICH IS INSTALLED DIFFERENTLY THAN IN THE LOCATION AND MANNER INDICATED ON THE DRAWINGS. PROVIDE A COPY OF THESE PLANS FOR THE OWNER.
27. UPON COMPLETION OF PROJECT, BALANCE PANELBOARD LOADS AMONG PHASES IN NEW PANELBOARDS WITHIN 10% OF EACH OTHER.
28. PROVIDE A FULL ONE YEAR WARRANTY ON ALL ELECTRICAL LABOR, AND MATERIALS INSTALLED ON THIS PROJECT, STARTING FROM THE ISSUANCE OF THE OWNERS CERTIFICATE OF OCCUPANCY.
29. PER FLORIDA ENERGY CODE SECTION C405.5.3, THESE PLANS HAVE BEEN DESIGNED TO LIMIT THE COMBINED VOLTAGE DROP ON FEEDERS AND BRANCH CIRCUITS TO 5% MAXIMUM.

ABBREVIATIONS:

A	AMPERES	KAIC	(THOUSAND) AMPERE INTERRUPTING CAPACITY
A/C	AIR CONDITIONING	KCMIL	THOUSANDS OF CIRCULAR MILS
AFF	ABOVE FINISHED FLOOR	KVA	KILOVOLT AMPERES
AFG	ABOVE FINISHED GRADE	KW	KILOWATT
AHU	AIR HANDLING UNIT	LTG	LIGHTING
AWG	AMERICAN WIRE GAUGE	MH	METAL HALIDE
B.C.	BELOW COUNTER	N	NEUTRAL
CH	COUNTER HEIGHT	N.C.	NORMALLY CLOSED
C	CONDUIT	NF	NON-FUSED
CFL	COMPACT FLUORESCENT	NL	NIGHT LIGHT
CT	CURRENT TRANSFORMER	P	POLE
CU	COPPER	PVC	POLYVINYL CHLORIDE
DISC	DISCONNECT	SPEC	SPECIFICATION
EM	EMERGENCY	SS	STAINLESS STEEL
EMT	ELECTRICAL METALLIC TUBING	SQ	SQUARE
EWC	ELECTRIC WATER COOLER	TS	TAMPER SWITCH
FACP	FIRE ALARM CONTROL PANEL	TTB	TELEPHONE TERMINAL BOARD
FS	FLOW SWITCH	TYP	TYPICAL
FMC	FLEXIBLE METAL CONDUIT	UC	UNDER COUNTER
GFI	GROUND FAULT CIRCUIT INTERRUPTER	UG	UNDERGROUND
GND	GROUND	UON	UNLESS OTHERWISE NOTED
GRC	GALVANIZED RIGID CONDUIT	V	VOLTS
HVAC	HEATING, VENTILATION, AIR CONDITIONING	W	WIRE
IG	ISOLATED GROUND	WP	WEATHERPROOF
J	JUNCTION	YWYE	(CONNECTED)

SYMBOLS

LIGHTING

- E — EXIT SIGN, CEILING OR PENDANT MOUNTED ABOVE DOOR. SEE LIGHTING FIXTURE SCHEDULE FOR DETAILS.
- E — EXIT SIGN, WALL MOUNTED ABOVE DOOR. SEE LIGHTING FIXTURE SCHEDULE FOR DETAILS.
- EXTERIOR WALL LIGHTING FIXTURE. SEE LIGHTING FIXTURE SCHEDULE FOR DETAILS.
- RECESSED OR SURFACE MOUNTED LIGHTING FIXTURE. SEE LIGHTING FIXTURE SCHEDULE FOR DETAILS.
- LED STRIP LIGHTING FIXTURE. SEE LIGHTING FIXTURE SCHEDULE FOR DETAILS.
- EMERGENCY BATTERY LIGHTING FIXTURE. SEE SCHEDULE FOR DETAILS.
- $\$_T$ — 125V AC DIGITAL 7-DAY, 24 HOUR TIMER SWITCH. MOUNT AT 48" AFF.
- BOLLARD LIGHTING FIXTURE. SEE LIGHTING FIXTURE SCHEDULE FOR DETAILS.
- SITE LIGHTING FIXTURE. SEE LIGHTING FIXTURE FOR DETAILS.

POWER AND WIRING

- 120/208V PANELBOARD AS SCHEDULED
- 3 30/* — FUSED DISCONNECT SWITCH. NEMA 1 (INDOOR) OR NEMA 3R (OUTDOOR). SINGLE NUMBER INDICATES NUMBER OF POLES. TOP NUMBER INDICATES MAXIMUM AMPERAGE. BOTTOM INDICATES ACTUAL FUSING AS INDICATED OR AS DETERMINED FROM MANUFACTURER'S NAMEPLATE. DISCONNECT SWITCH MUST BE CAPABLE OF BEING LOCKED IN THE OPEN (OFF) POSITION.
- 3 30/NF — NON-FUSED (NF) DISCONNECT SWITCH. NEMA 1 (INDOOR) OR NEMA 3R (OUTDOOR). SINGLE NUMBER INDICATES NUMBER OF POLES. TOP NUMBER INDICATES MAXIMUM AMPERAGE. DISCONNECT SWITCH MUST BE CAPABLE OF BEING LOCKED IN THE OPEN (OFF) POSITION.
- J — JUNCTION BOX. CODE SIZED FOR APPLICATION.
- RACEWAY CONCEALED ABOVE CEILING, IN WALLS OR EXPOSED.
- RACEWAY CONCEALED BELOW FLOOR, ROOF, OR GRADE.
- HOMERUN TO PANELBOARD, NUMBER OF ARROWS INDICATES NUMBER OF CIRCUITS. PROVIDE GREEN INSULATED GROUNDING CONDUCTOR IN ALL POWER AND LIGHTING RACEWAYS, NOT SHOWN ON PLANS.
- GROUND

WIRING DEVICES

- 125V AC 20 AMP DUPLEX RECEPTACLE, NEMA 5-20R MOUNTED AT 18" AFF, U.O.N.
- WP — 125V AC 20 AMP DUPLEX RECEPTACLE NEMA 5-20R, WITH GROUND FAULT CIRCUIT INTERRUPTER, RECEPTACLE SHALL BE LISTED AS WEATHER RESISTANT
- 125V AC 20 AMP DUPLEX RECEPTACLE NEMA 5-20R, WITH GROUND FAULT CIRCUIT INTERRUPTER, MOUNTED AT 18" A.F.F, U.O.N.
- 125V AC 20 AMP DUPLEX RECEPTACLE, NEMA 5-20R MOUNTED AT COUNTER HEIGHT, TOP OF DEVICE LESS THAN 46" AFF.
- 125V AC 20 AMP DUPLEX RECEPTACLE NEMA 5-20R, WITH GROUND FAULT CIRCUIT INTERRUPTER, MOUNTED AT COUNTER HEIGHT, TOP OF DEVICE LESS THAN 46" AFF.

SUBMITTALS

1. SUBMIT MANUFACTURERS' CUT SHEETS AND CATALOG DATA CLEARLY INDICATING THE SPECIFIC PART OR PRODUCT CATALOG NUMBER(S) FOR APPROVAL.
2. ELECTRONICALLY SUBMIT REQUESTED INFORMATION, NEATLY BOUND AND INDEXED PER CATEGORY FOR THE FOLLOWING ITEMS, NOT ALL RELEVANT ON ALL PROJECTS:
   A. INTERIOR AND EXTERIOR LIGHTING FIXTURES.
   B. EXTERIOR LIGHTING POLES WITH RELEVANT WIND LOAD DATA.
   C. LIGHTING CONTROLS, CONTACTORS, PHOTOCELLS.
   D. SWITCHGEAR INCLUDING PANELBOARDS, DISCONNECT SWITCHES.
   E. SURGE PROTECTION DEVICES WITH INSTALLATION INSTRUCTIONS.
3. ALLOW TWO WEEKS FOR ENGINEER TO COMPLETE REVIEW OF SHOP DRAWINGS. ENGINEER WILL NOT BE RESPONSIBLE FOR PROJECT DELAYS RELATED TO DELIVERY AND TRANSMISSION OF SHOP DRAWINGS ONCE INFORMATION HAS LEFT ENGINEER'S OFFICE. ITEMS REQUIRING LONG LEAD TIME SHOULD BE SUBMITTED AS SOON AS POSSIBLE.

REV#	DATE	REVISION
1	07/10/23	COUNTY COMMENTS

CONSTRUCTION ENGINEERING GROUP
Consulting Engineers
2651 EAU GALLIE BLVD, SUITE A
MELBOURNE, FL 32935
TEL. 321.253.1221
WWW.CEGENGINEERING.COM
C.O.A. #0008097

ELEVEN 18 ARCHITECTURE
A WOMEN'S BUSINESS ENTERPRISE
License: AA26001884
424 E. Central Blvd. #542
Orlando, FL 32801
www.eleven18architecture.com
Mark Adams: 407-756-2119
Kim Day: 407-416-9960
Neke White: 407-416-9965

STARBUCKS
TUSKAWILLA
3645 ALOMA AVE, OVIEDO, FL 32765

DRAWING TITLE
ELECTRICAL NOTES AND SYMBOLS

COPYRIGHT © STATEMENT
THESE DOCUMENTS AND THEIR CONTENTS ARE THE PROPERTY OF CONSTRUCTION ENGINEERING GROUP (CEG) AND ARE ISSUED ONLY FOR THE SPECIFIC PROJECT NOTED ON THESE DOCUMENTS. ANY REVISIONS, REPRODUCTIONS OR MODIFICATIONS OF THESE DOCUMENTS WITHOUT THE EXPRESS WRITTEN CONSENT OF CEG IS PROHIBITED BY LAW.

ENGINEER OF RECORD

DAVID E. ALLEY, PE
FL PE #55008

DATE	06-23-23
SCALE	AS NOTED
PROJ. NO. :	230069
DESIGNED BY:	DAP
DRAWN BY:	DAP
CHECKED BY:	DEA
DRAWING NO.	E1

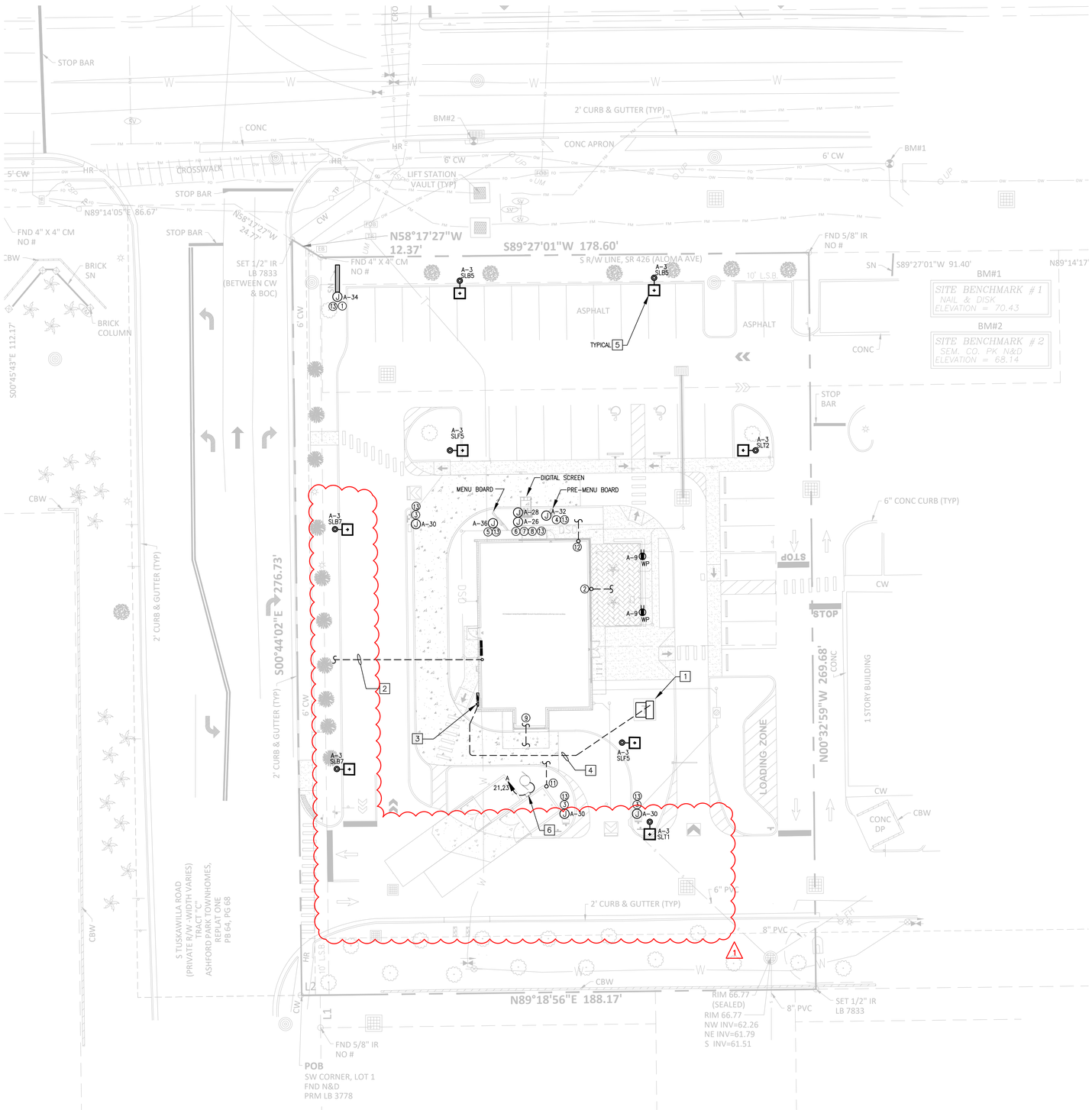

SITE ELECTRICAL PLAN

SCALE: 1" = 20'

SCALE 1" = 20'

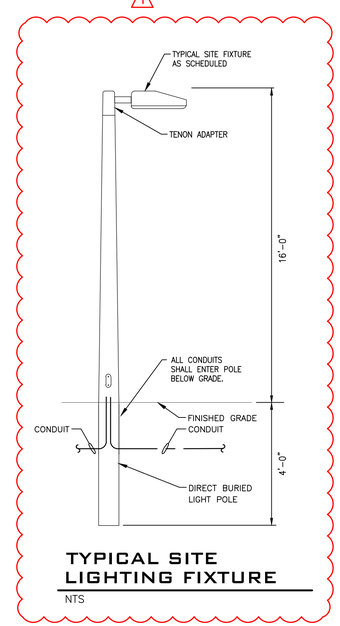

TYPICAL SITE LIGHTING FIXTURE

NTS

811 KNOW WHAT'S BELOW ALWAYS CALL 811 BEFORE YOU DIG
It's fast. It's free. It's the law.
www.callsunshine.com

GENERAL NOTES:

A. VERIFY FULL SCOPE OF WORK WITH LANDLORD WORK LETTER PRIOR TO BID. NO EXTRAS OR CHANGE ORDERS SHALL BE GIVEN FOR THE GC'S FAILURE TO FULLY UNDERSTAND THE SCOPE.

B. COORDINATE ALL CONDUIT ROUTING WITH ARCHITECTURAL AND CIVIL PLANS, AND OTHER TRADES.

C. SIGN LOCATIONS ON THIS PLAN ARE FOR REFERENCE ONLY, ACTUAL LOCATIONS SHALL BE DETERMINED FROM THE ARCHITECTURAL AND CIVIL PLANS, AND THE CONSTRUCTION MANAGER.

D. REFER TO POWER PLAN FOR PANELBOARD LOCATIONS.

E. FOR ALL SIGN / MENU LOCATIONS, VERIFY ALL ELECTRICAL REQUIREMENTS WITH MANUFACTURER PRIOR TO ROUGH-IN. PROVIDE CONDUCTORS AND OVERCURRENT PROTECTION FOR A COMPLETE INSTALLATION.

PLAN NOTES: □

1. PROPOSED LOCATION OF NEW PAD MOUNTED TRANSFORMER. REFER TO RISER DIAGRAM ON DRAWING E6 FOR ADDITIONAL INFORMATION.
2. EXTEND (1) 2" U.G. CONDUIT FOR BROADBAND AND (1) 2" U.G. CONDUIT FOR TELEPHONE SERVICE FROM SERVICE POINT TO LOCATION OF FUTURE TENANT TTB. FIELD VERIFY WITH SERVICE PROVIDER EXACT TERMINATION POINT PRIOR TO ROUGH-IN. SEE PLAN NOTE 1 ON E5 FOR ADDITIONAL INFORMATION.
3. LOCATION OF METER AND SERVICE DISCONNECT SWITCH. REFER TO RISER DIAGRAM ON DRAWING E6 FOR ADDITIONAL INFORMATION
4. PROPOSED SERVICE LATERAL ROUTING FROM TRANSFORMER SECONDARY COMPARTMENT TO BUILDING MOUNTED METER.
5. PROVIDE SITE LIGHTING POLES AND FIXTURES AS SCHEDULED. FIXTURES SPECIFIED WITH SMART CONTROLS FOR AUTOMATIC LIGHTING REDUCTION.
6. PROPOSED LOCATION OF SITE IRRIGATION PUMP AND CONTROLLER. PUMP AND CONTROLLER PROVIDED BY OTHERS. FIELD VERIFY EXACT LOCATION PRIOR TO ROUGH-IN OF U.G. CONDUIT.

KEY NOTES: ⓧ

GENERAL: FURNISH AND INSTALL ALL UNDERGROUND ELECTRICAL/DATA CONDUITS, LABELED WITH PULL STRINGS, FROM THE ELECTRICAL PANELS AND LOW VOLTAGE DISTRIBUTION POINTS TO THE FOLLOWING SITE, AND DRIVE-THRU COMPONENTS:

SITE SIGNAGE:

(1) ONE [1] 1" CONDUIT FOR TENANT'S DEDICATED MONUMENT/PYLON SIGN TO ELECTRICAL PANEL IN BOH (BACK OF HOUSE). PROVIDE A WEATHERPROOF JUNCTION BOX WITH DISCONNECT SWITCH.

(2) TWO [2] 1" CONDUITS TO BE RUN FROM BOH ELECTRICAL PANEL THROUGH FOUNDATION WALL, TO PATIO SEATING AREA. TERMINATE CONDUIT AT GRADE IN PLANTER ADJACENT TO PATIO SEATING.

(3) ONE [1] 1" CONDUIT FOR EACH DIRECTIONAL SIGN TO ELECTRICAL PANELS IN BOH. (MAXIMUM THREE [3] DIRECTIONAL SIGNS SERVED BY A SINGLE CIRCUIT). PROVIDE A WEATHERPROOF JUNCTION BOX WITH DISCONNECT SWITCH.

PRE-ORDER MENU:

(4) ONE [1] 1" CONDUIT FROM PRE-ORDER MENU BOARD TO ELECTRICAL PANELS IN BOH

MENU

(5) ONE [1] 1" CONDUIT FOR TENANT'S MENU BOARD TO ELECTRICAL PANELS IN BOH

DIGITAL ORDER SCREEN:

(6) ONE [1] 1" CONDUIT FROM DIGITAL ORDER SCREEN TO ELECTRICAL PANELS IN BOH

(7) TWO [2] 1" CONDUITS FOR DATA FROM DIGITAL ORDER SCREEN TO THE INTERIOR OF THE DRIVE THRU "BUMP-OUT"

(8) ONE [1] 1" CONDUIT EMBED IN DRIVE THRU LANE FOR VEHICLE DETECTOR LOOP. CENTER CONDUIT ON DIGITAL ORDER SCREEN POST.

DRIVE THRU WINDOW:

(9) ONE [1] 1" CONDUIT EMBED IN DRIVE THRU LANE FOR VEHICLE DETECTOR LOOP. CENTER CONDUIT ON DRIVE THRU WINDOW.

OTHER:

(10) ONE [1] 1" CONDUIT FROM LIGHTED BOLLARDS TO ELECTRICAL PANELS IN BOH (WHERE SHOWN)

(11) ONE [1] 1" CONDUIT FROM TRASH ENCLOSURE TO ELECTRICAL PANELS IN BOH

(12) THREE [3] 1" SPARE CONDUITS TO BE RUN THROUGH FOUNDATION ADJACENT TO ELECTRICAL PANEL. CONDUITS SHALL TERMINATE AT GRADE (EXTERIOR SIDE), AND EXTEND ABOVE CEILING ON INTERIOR SIDE.

(13) CIRCUIT SERVING THIS DEVICE SHALL BE AUTOMATICALLY CONTROLLED. FURNISH AND INSTALL ALL CONDUIT, WIRE, CONNECTIONS, AND CONTACTORS NECESSARY TO ENSURE A FUNCTIONAL SYSTEM (SEE LIGHTING CONTROL DIAGRAM ON E6).

CONTRACTOR SHALL REFER TO CIVIL DRAWINGS AND STARBUCK SITE EQUIPMENT RISER FOR DIAGRAMS ON DRAWING E3 FOR ADDITIONAL CONDUITS THAT MAY BE REQUIRED. REFER TO CIVIL DRAWINGS FOR EXACT LOCATIONS OF STARBUCKS EXTERIOR EQUIPMENT, SITE SIGNAGE AND SITE LIGHTING POLES.

CONTRACTOR SHALL GO ONLINE TO WWW.SUNSHINE811.COM TO FILL OUT A UTILITY MARKING REQUEST TICKET AT LEAST TWO FULL BUSINESS DAYS BEFORE DIGGING TO HAVE UTILITIES LOCATED AND MARKED. UNDERGROUND SERVICE CONDUCTORS THAT ARE NOT ENCASED IN CONCRETE AND ARE BURIED 18" OR MORE BELOW GRADES SHALL HAVE THEIR LOCATION IDENTIFIED BY A WARNING RIBBON THAT IS PLACED IN THE TRENCH AT LEAST 12" ABOVE THE UNDERGROUND INSTALLATION. THE ELECTRICAL CONTRACTOR IS REQUIRED TO CALL FOR CONDUIT DEPTH AND WARNING RIBBON PLACEMENT ELECTRICAL INSPECTIONS FOR THE SERVICE LATERAL. NEC 230.32, 300.5 C 3.

REV#	DATE	REVISION COUNTY COMMENTS
1	07/10/23	

2651 EAU GALLIE BLVD. SUITE A
MELBOURNE, FL 32935
TEL. 321.253.1721
WWW.CCGENGINEERING.COM
C.O.A. #0008097
CONSTRUCTION ENGINEERING GROUP
Consulting Engineers

ELEVEN 18 ARCHITECTURE
A WOMEN'S BUSINESS ENTERPRISE
License: AA26001884
424 E. Central Blvd. #542
Orlando, FL 32801
www.eleven18architecture.com
Mark Adams: 407.756.2119
Kim Day: 407.416.9960
Neke White: 407.416.9965

STARBUCKS
TUSKAWILLA
3645 ALOMA AVE, OVIEDO, FL 32765

DRAWING TITLE
SITE ELECTRICAL PLAN

COPYRIGHT © STATEMENT
THESE DOCUMENTS AND THEIR CONTENTS ARE THE PROPERTY OF CONSTRUCTION ENGINEERING GROUP (CEG) AND ARE ISSUED ONLY FOR THE SPECIFIC PROJECT NOTED ON THESE DOCUMENTS. ANY REVISIONS, REPRODUCTIONS OF MODIFICATIONS OF THESE DOCUMENTS WITHOUT THE EXPRESS WRITTEN CONSENT OF CEG IS PROHIBITED BY LAW.

ENGINEER OF RECORD

DAVID E. ALLEY, PE
FL PE #55008

DATE	06-23-23
SCALE	AS NOTED
PROJ. NO. :	230069
DESIGNED BY:	DAP
DRAWN BY:	DAP
CHECKED BY:	DEA
DRAWING NO.	E2

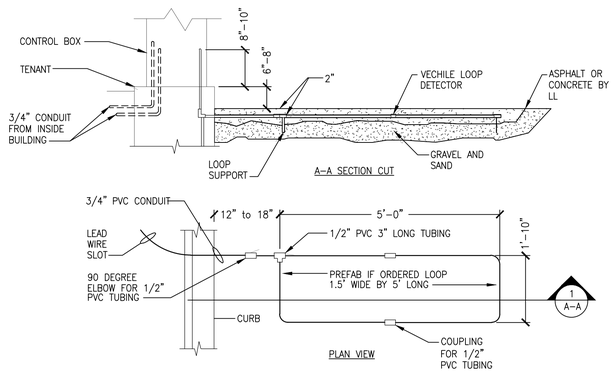

DTE - SENSOR LOOP DETAIL

SCALE: NONE

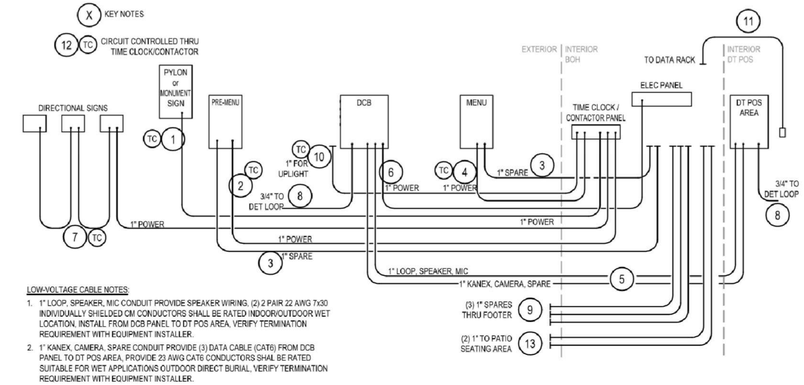

LOW-VOLTAGE CABLE NOTES:

1. 1" LOOP, SPEAKER, MIC CONDUIT PROVIDE SPEAKER WIRING, (2) 2 PAIR 22 AWG 7x30 INDIVIDUALLY SHIELDED CM CONDUCTORS SHALL BE RATED INDOOR/OUTDOOR WET LOCATION. INSTALL FROM DCB PANEL TO DT POS AREA. VERIFY TERMINATION REQUIREMENT WITH EQUIPMENT INSTALLER.
2. 1" KANEX, CAMERA, SPARE CONDUIT PROVIDE (3) DATA CABLE (CAT6) FROM DCB PANEL TO DT POS AREA, PROVIDE 23 AWG CAT6 CONDUCTORS SHAL BE RATED SUITABLE FOR WET APPLICATIONS OUTDOOR DIRECT BURIAL. VERIFY TERMINATION REQUIREMENT WITH EQUIPMENT INSTALLER.

DTE CONDUIT SCHEMATIC

SCALE: NONE

KEY NOTES: (X)

1. PROVIDE (1) 1" PVC CONDUIT FOR POWER CONNECTION TO STARBUCKS MONUMENT SIGNAGE. PROVIDE A WEATHERPROOF JUNCTION BOX WITH DISCONNECT SWITCH.
2. PROVIDE (1) 1" PVC CONDUIT FOR POWER CONNECTION TO PRE-MENU SIGN AND (1) 1" PVC CONDUIT WITH PULL STRING CONTINUOUS TO TELEPHONE BOARD FOR DATA CONNECTION. PROVIDE WEATHERPROOF JUNCTION BOX WITH DISCONNECT SWITCH.
3. PROVIDE (1) 1" PVC CONDUIT FOR FUTURE USE TO MENU SIGN AND TO PRE-MENU SIGN.
4. PROVIDE (1) 1" PVC CONDUIT FOR POWER CONNECTION TO MENU SIGN AND (1) 1" PVC CONDUIT WITH PULL STRING CONTINUOUS TO TELEPHONE BOARD FOR DATA CONNECTION. PROVIDE WEATHERPROOF JUNCTION BOX WITH DISCONNECT SWITCH.
5. PROVIDE (2) 1" PVC CONDUITS FROM OCS/SPEAKER POST (AKA DOS/DCB) TO DRIVE-THRU WINDOW – SEE LOW-VOLTAGE CABLE NOTES.
6. PROVIDE (1) 1" PVC CONDUIT FROM OCS/SPEAKER POST (AKA DOS/DCB) TO ELECTRICAL PROVIDE WEATHERPROOF JUNCTION BOX WITH DISCONNECT SWITCH.
7. PROVIDE (1) 1" PVC CONDUIT FOR POWER CONNECTION TO STARBUCKS DIRECTIONAL SIGNAGE. NOTE THAT UP TO THREE DIRECTIONAL SIGNS CAN BE SERVED BY A SINGLE CIRCUIT. ADDITIONAL SIGNS REQUIRE A NEW DEDICATED CIRCUIT AND CONDUIT.
8. PROVIDE A WEATHERPROOF JUNCTION BOX WITH DISCONNECT SWITCH. PROVIDE (1) 3/4" PVC CONDUIT FOR EACH OF TWO TENANT-FURNISHED DETECTOR LOOP SETS IN COORDINATION WITH TENANT CONSTRUCTION MANAGER.
9. PROVIDE (1) SPARE 1" PVC CONDUIT THRU FOUNDATION WALL OUT REAR OF BUILDING, CAPPED AND TERMINATED ABOVE CEILING. VERIFY LOCATION OF STUB UP WITH TENANT'S REPRESENTATIVE.
10. PROVIDE (1) 1" PVC CONDUIT TO CANOPY UPLIGHT FROM ELECTRICAL PANEL.
11. PROVIDE (1) 1-1/2" CONDUIT FROM DATA RACK AT MANAGER WORKSTATION TO DRIVE-THRU BUMP.
12. CIRCUIT SERVING THIS DEVICE SHALL BE AUTOMATICALLY CONTROLLED. FURNISH AND INSTALL ALL CONDUIT, WIRE, CONNECTIONS, AND CONTACTORS NECESSARY TO ENSURE A FUNCTIONAL SYSTEM (SEE LIGHTING CONTROL DIAGRAM ON E-6001).
13. PROVIDE (2) 1" PVC CONDUIT TO PATIO AREA FROM ELECTRICAL PANEL.

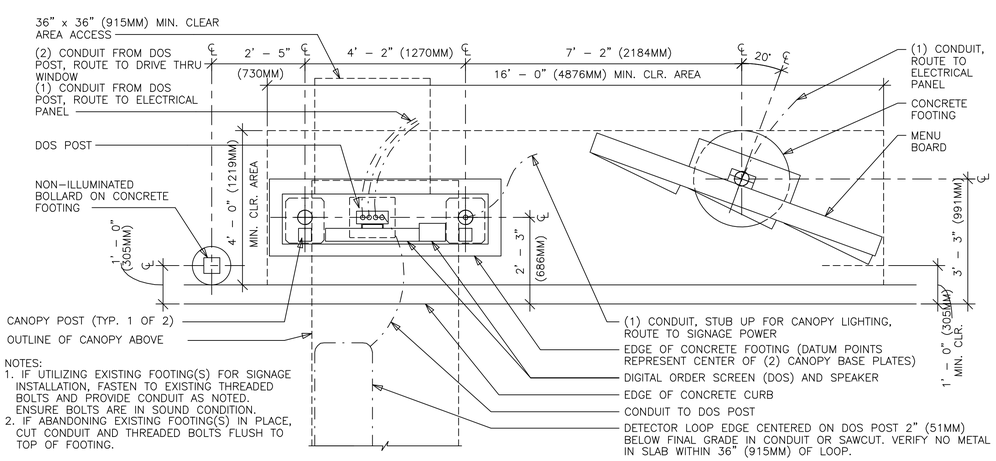

NOTES:
1. IF UTILIZING EXISTING FOOTING(S) FOR SIGNAGE INSTALLATION, FASTEN TO EXISTING THREADED BOLTS AND PROVIDE CONDUIT AS NOTED. ENSURE BOLTS ARE IN SOUND CONDITION.
2. IF ABANDONING EXISTING FOOTING(S) IN PLACE, CUT CONDUIT AND THREADED BOLTS FLUSH TO TOP OF FOOTING.

DTE - DT MENU BOARD, DIGITAL ORDER SCREEN WITH CANOPY

SCALE: 1/2" = 1'-0"

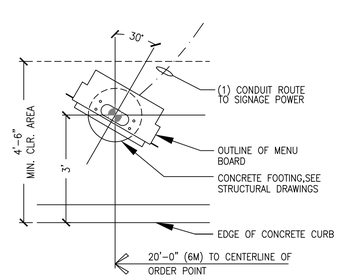

DTE - PRE-MENU 30 DEG

SCALE: 1/2" = 1'-0"

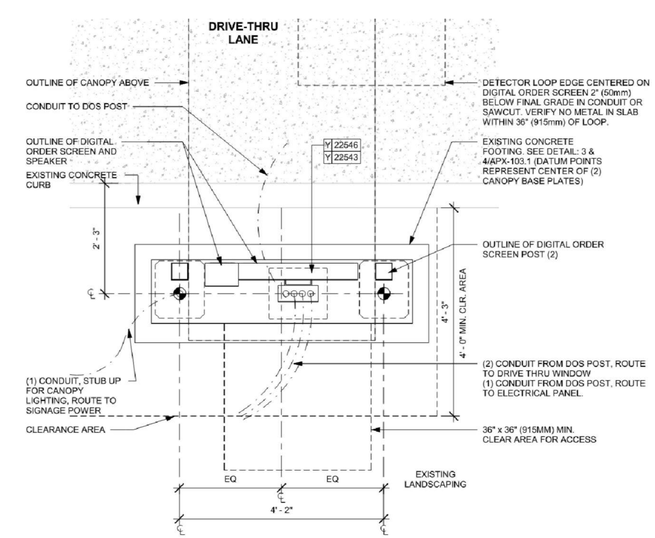

DTE - DOS CONTROL BOX CONDUIT STUB-UPS AT CANOPY

SCALE: 1/2" = 1'-0"

REV#	DATE	REVISION

2651 EAU GALLIE BLVD. SUITE A
MELBOURNE, FL 32935
TEL: 321.253.1721
WWW.CEGENGINEERING.COM
C.O.A. #0008097
CONSTRUCTION ENGINEERING GROUP
Consulting Engineers

ELEVEN18 ARCHITECTURE
A WOMEN'S BUSINESS ENTERPRISE
License: AA26001884
424 E. Central Blvd. #542
Orlando, FL 32801
www.eleven18architecture.com
Mark Adams: 407.756.2119
Kim Day: 407.416.9960
Neke White: 407.416.9965

STARBUCKS
TUSKAWILLA
3645 ALOMA AVE, OVIEDO, FL 32765

DRAWING TITLE
SITE ELECTRICAL DETAILS

COPYRIGHT © STATEMENT
THESE DOCUMENTS, THEIR CONTENT AND DESIGN ARE THE PROPERTY OF CONSTRUCTION ENGINEERING GROUP (CEG) AND ARE ISSUED ONLY FOR THE SPECIFIC PROJECT NOTED ON THESE DOCUMENTS. ANY REVISIONS, REPRODUCTIONS AND DISTRIBUTION OF THESE DOCUMENTS WITHOUT THE EXPRESS WRITTEN CONSENT OF CEG IS PROHIBITED BY LAW.

ENGINEER OF RECORD

DAVID E. ALLEY, PE
FL PE #55008

DATE	06-23-23
SCALE	AS NOTED
PROJ. NO. :	230069
DESIGNED BY:	DAP
DRAWN BY:	DAP
CHECKED BY:	DEA
DRAWING NO.	E3

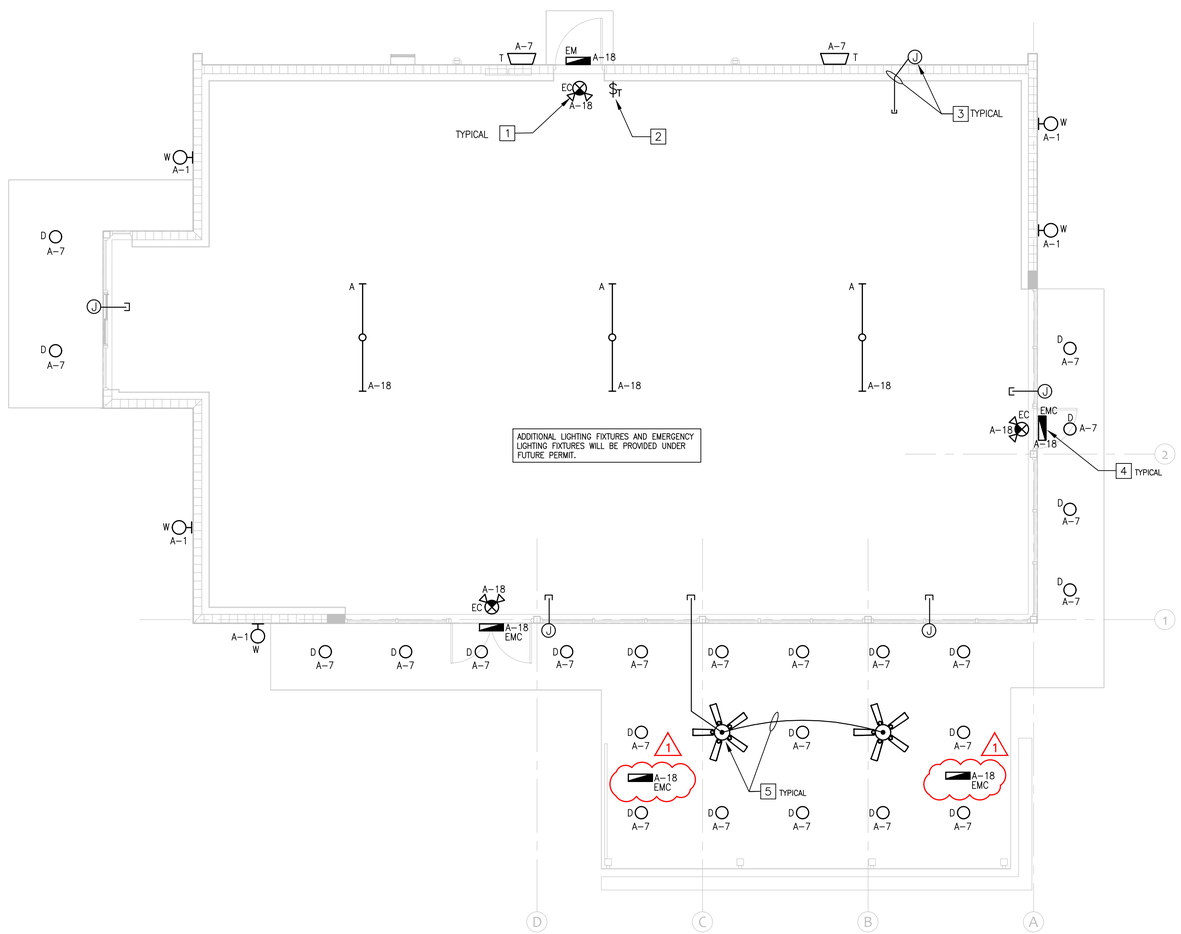

LIGHTING PLAN

SCALE: 3/16" = 1'-0"

0' 2'-4" 5'-4" 10'-8" 21'-4"

3/16"=1'-0"

LIGHTING NOTES:

1. EXIT AND EMERGENCY BATTERIES SHALL REMAIN UNSWITCHED.
2. PROVIDE 120V, INTERMATIC #EI215 ELECTRONIC PUSH BUTTON TIMER SWITCH FOR CONTROL OF TEMPORARY CONSTRUCTION LIGHTS.
3. PROVIDE JUNCTION BOX AND 3/4" CONDUIT WITH PULL STRING FOR FUTURE TENANT SIGNAGE. STUB CONDUIT INTO TENANT SPACE ABOVE FUTURE CEILING. FIELD VERIFY EXACT SIGN LOCATIONS AND ELEVATIONS PRIOR TO ROUGH-IN.
4. SURFACE MOUNT EMERGENCY LIGHTING FIXTURE TO CANOPY WITH CONCEALED CONDUIT. REMOTE MOUNT DRIVER AND BATTERY INSIDE ABOVE AT TOP OF WALL ABOVE FUTURE TENANT CEILINGS.
5. PROVIDE CEILING FAN RATED JBOX FOR FUTURE OWNER PROVIDE CEILING FANS. FROM JBOX EXTEND (1) 3/4" EMPTY CONDUIT INTO TENANT SPACE ABOVE FUTURE CEILING.

REV#	DATE	REVISION COUNTY COMMENTS
1	07/10/23	

CONSTRUCTION ENGINEERING GROUP
Consulting Engineers
2651 EAU GALLIE BLVD. SUITE A
MELBOURNE, FL 32935
TEL. 321.253.1221
WWW.CEGENGINEERING.COM
C.O.A. #0008097

ELEVEN18 ARCHITECTURE
A WOMEN'S BUSINESS ENTERPRISE
License: AA26001884
424 E. Central Blvd. #542
Orlando, FL 32801
www.eleven18architecture.com
Mark Adams: 407-756-2119
Kim Day: 407-416-9960
Neke White: 407-416-9965

STARBUCKS
TUSKAWILLA
3645 ALOMA AVE, OVIEDO, FL 32765

DRAWING TITLE
LIGHTING PLAN

COPYRIGHT © STATEMENT
THESE DOCUMENTS AND THEIR CONTENTS ARE THE PROPERTY OF CONSTRUCTION ENGINEERING GROUP (CEG) AND ARE ISSUED ONLY FOR THE SPECIFIC PROJECT AND LOCATION NOTED ON THE COVER SHEET. ANY REVISIONS, REPRODUCTIONS AS NOTED ABOVE OR OTHERWISE, OR ANY USE OF THESE DOCUMENTS WITHOUT THE EXPRESS WRITTEN CONSENT OF CEG IS PROHIBITED BY LAW.

ENGINEER OF RECORD

DAVID E. ALLEY, PE
FL PE #55008

DATE	06-23-23
SCALE	AS NOTED
PROJ. NO. :	230069
DESIGNED BY:	DAP
DRAWN BY:	DAP
CHECKED BY:	DEA
DRAWING NO.	E4

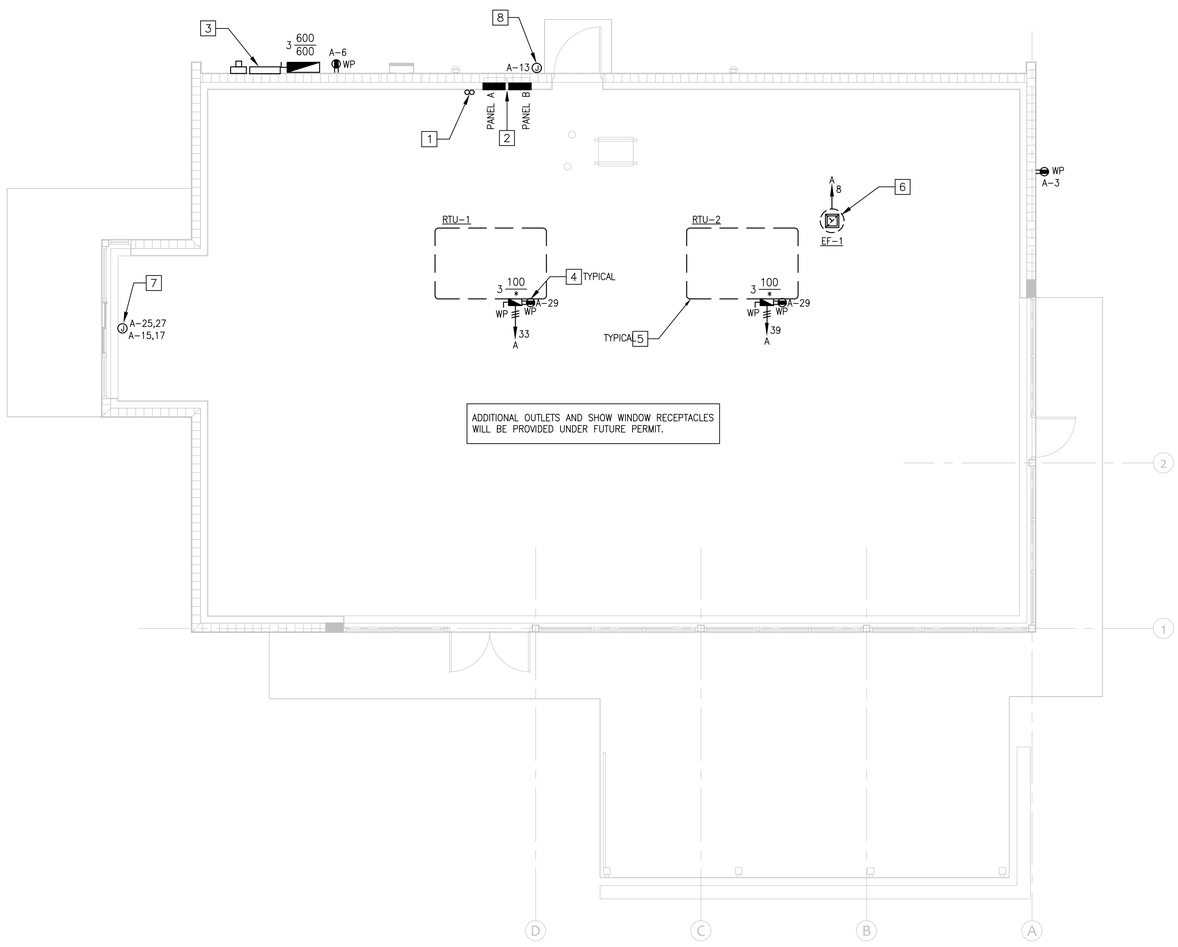

POWER AND SYSTEMS PLAN

SCALE: 3/16" = 1'-0"

0' 2'-4" 5'-4" 10'-8" 21'-4"

3/16"=1'-0"

POWER NOTES:

1. STUB-UP (2) 2" CONDUITS FROM SITE COMMUNICATION PROVIDERS TO ABOVE CEILING AND EXTEND OVERHEAD TO THE LOCATION OF THE TENANT'S OFFICE. REFER TO SITE PLAN ON DRAWING E2 FOR ADDITIONAL INFORMATION. EXACT LOCATION TO BE BASED ON TENANT FLOOR PLANS.
2. PROPOSED LOCATION OF TENANT ELECTRICAL PANELS A AND B. EXACT LOCATION TO BE BASED ON TENANT FLOOR PLANS. SEE RISER DIAGRAM ON DRAWING E6 FOR ADDITIONAL INFORMATION.
3. PROPOSED METER AND DISCONNECT SWITCH LOCATION. SEE RISER DIAGRAM ON DRAWING E6 FOR ADDITIONAL INFORMATION.
4. INSTALL ROOF TOP RECEPTACLES BELOW DISCONNECT SWITCH.
5. ALL CONDUITS SERVING ROOF TOP MOUNTED EQUIPMENT SHALL CONNECT TO THE EQUIPMENT THROUGH THE EQUIPMENT ROOF CURB OPENING ONLY IN FACTORY APPROVED LOCATIONS PER THE RTU MANUFACTURER'S WRITTEN INSTALLATION DRAWINGS.
6. EF-1 SHALL BE TIME CLOCK CONTROLLED REFER TO LIGHTING CONTROL DIAGRAM ON DRAWING E6 FOR ADDITIONAL INFORMATION.
7. COORDINATE ROUGH-IN REQUIREMENTS OF ELECTRICAL CIRCUITS SERVING THE DRIVE-THRU WINDOW SYSTEM WITH VENDOR BASED ON SPECIFIC SYSTEM BEING PROVIDED.
8. PROVIDE JUNCTION BOX, 120V BRANCH CIRCUIT, EXTERIOR PUSH BUTTON AND NUTONE DOOR BELL #MCV309NWHGL. PROVIDE LOW VOLTAGES WIRING AS REQUIRED.

REV#	DATE	REVISION

CONSTRUCTION ENGINEERING GROUP
Consulting Engineers
2651 EAU GALLIE BLVD. SUITE A
MELBOURNE, FL 32935
TEL. 321.253.1721
WWW.CEGENGINEERING.COM
C.O.A. #0008097

ELEVEN 18 ARCHITECTURE
A WOMEN'S BUSINESS ENTERPRISE
License: AA26001884
424 E. Central Blvd. #542
Orlando, FL 32801
www.eleven18architecture.com
Mark Adams: 407.756.2119
Kim Day: 407.416.9960
Neke White: 407.416.9965

STARBUCKS
TUSKAWILLA
3645 ALOMA AVE, OVIEDO, FL 32765

DRAWING TITLE
POWER AND SYSTEMS PLAN

COPYRIGHT © STATEMENT
THESE DOCUMENTS AND THEIR CONTENTS ARE THE PROPERTY OF CONSTRUCTION ENGINEERING GROUP (CEG) AND ARE ISSUED ONLY FOR THE SPECIFIC PROJECT NOTED ON THESE DOCUMENTS. ANY REVISIONS, REPRODUCTIONS OR MODIFICATIONS OF THESE DOCUMENTS WITHOUT THE EXPRESS WRITTEN CONSENT OF CEG IS PROHIBITED BY LAW.

ENGINEER OF RECORD

DAVID E. ALLEY, PE
FL PE #55008

DATE	06-23-23
SCALE	AS NOTED
PROJ. NO. :	230069
DESIGNED BY:	DAP
DRAWN BY:	DAP
CHECKED BY:	DEA
DRAWING NO.	E5

LIGHTING CONTROLS

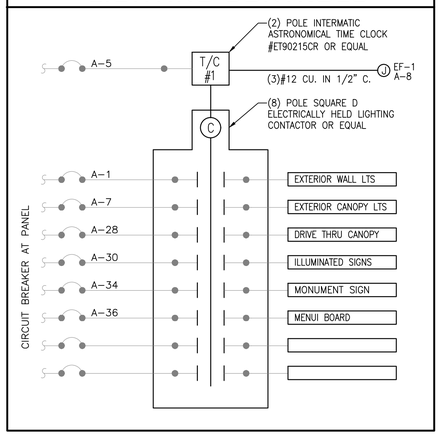

PANEL SCHEDULE

PANEL: A — RATING: 600A MLO — SERVICE: 120/208V, 3ø, 4W — LUG LOCATION: BOTTOM — MOUNTING: FLUSH — A.I.C. : SERIES RATED — TYPE: SQ-D NQ

CKT	DESCRIPTION	KVA	CKT BRKR POLE	CKT BRKR TRIP	BRANCH ø	BRANCH N	BRANCH GND	CIRCUIT C*	ø	CKT	DESCRIPTION	KVA	CKT BRKR POLE	CKT BRKR TRIP	BRANCH ø	BRANCH N	BRANCH GND	CIRCUIT C*
1	EXTERIOR BUILDING LIGHTS #	0.30	1	20	10	10	10	1	a	2	SPARE		1	20				
3	RECEPTS EXTERIOR	0.54	1	20	12	12	12	3/4	b	4	SPARE		1	20				
5	TIME CLOCK		1	20					c	6	RECEPTS - EXTERIOR	0.54	1	20	12	12	12	3/4
7	EXTERIOR BUILDING LIGHTS #	0.80	1	20	10	10	10	1	a	8	EF-1 @	0.31	1	20	12	12	12	3/4
9	RECEPT - PATIO	0.72	1	20	10	10	10	1	b	10	SPARE		1	20				
11	SPARE		1	20					c	12	SPARE		1	20				
13	DOOR BELL	0.10	1	20	12	12	12	3/4	a	14	SPARE		1	20				
15	DRIVE THRU WINDOW	0.50	1	20	12	12	12	3/4	b	16	SPARE		1	20				
17	DRIVE THRU WINDOW	0.50	1	20	12	12	12	3/4	c	18	CONSTRUCTION LIGHTS	0.50	1	20	12	12	12	3/4
19	SPARE		1	20					a	20	SPARE		1	20				
21	SPARE		2	30					b	22	SPARE		1	20				
23									c	24	SPARE		1	20				
25	AIR CURTAIN	0.70	2	40	8	-	10	1	a	26	DRIVE THRU DSC\DCB	0.50	1	20	10	10	10	1
27		0.70			8				b	28	DRIVE THRU CANOPY #	0.40	1	20	10	10	10	1
29	RECEPTS - ROOF	0.36	1	20	12	12	12	3/4	c	30	ILLUMINATED SIGNS #	0.60	1	20	10	10	10	1
31					3				a	32	PRE-MENU BOARD	0.40	1	20	10	10	10	1
33	RTU-1	23.6	3	90	3	-	8	1 1/4	b	34	MONUMENT SIGN #	0.10	1	20	12	12	12	3/4
35					3				c	36	MENU BOARD #	0.5	1	20	12	12	12	3/4
37					3				a	38								
39	RTU-2	23.6	3	90	3	-	8	1 1/4	b	40	SPARE		3	20				
41					3				c	42								
43	SPARE		1	20					a	44	SPARE		1	20				
45			1	20					b	46			1	20				
47			1	20					c	48			1	20				
49			1	20					a	50			1	20				
51			1	20					b	52			1	20				
53			1	20					c	54			1	20				
55			1	20					a	56			1	20				
57			1	20					b	58			1	20				
59			1	20					c	60			1	20				
61			1	20					a	62			1	20				
63			1	20					b	64			1	20				
65			1	20					c	66			1	20				

CONNECTED LOAD (KVA) øA ____ øB ____ øC ____

EQUIPMENT SERVED	CONNECTED LOAD	LF	DF	DEMAND LOAD
LIGHTING	3.6		1.25	4.5
HVAC EQUIPMENT	47.2			47.2
RECEPTS (10KVA PLUS 50% REST)	1.08			1.08
MISC. EQUIPMENT	2.5			2.5
		TOTAL KVA:		55
		AMPS:		153

REMARKS:
- PROVIDE TYPE WRITTEN DIRECTORY
- PROVIDE NEUTRAL AND GROUND BARS
- PROVIDE FEED THRU LUGS
- @ TIME CLOCK CONTROLLED
- PANEL SHALL BE SERIES RATED TO UPSTREAM FUSED DISCONNECT SWITCH.
- PROVIDE LOCKABLE HINGED DOOR-IN-DOOR.
- # CONTACTOR CONTROLLED

PANEL SCHEDULE

PANEL: B — RATING: 225A MCB — SERVICE: 120/208V, 3ø, 4W — LUG LOCATION: BOTTOM — MOUNTING: FLUSH — A.I.C. : SERIES RATED — TYPE: SQ-D NQ

CKT	DESCRIPTION	KVA	CKT BRKR POLE	CKT BRKR TRIP	BRANCH ø	BRANCH N	BRANCH GND	CIRCUIT C*	ø	CKT	DESCRIPTION	KVA	CKT BRKR POLE	CKT BRKR TRIP	BRANCH ø	BRANCH N	BRANCH GND	CIRCUIT C*
1	SPARE GFCI CB		2	20					a	2	SPARE GFCI CB		2	40				
3									b	4								
5	GFCI CB		2	40					c	6	GFCI CB		2	30				
7									a	8								
9	GFCI CB		2	40					b	10	GFCI CB		1	20				
11									c	12	GFCI CB		1	20				
13	GFCI CB		2	50					a	14	GFCI CB		1	20				
15									b	16	GFCI CB		1	20				
17	GFCI CB		2	30					c	18	GFCI CB		1	20				
19									a	20	GFCI CB		1	20				
21	GFCI CB		2	30					b	22	GFCI CB		1	20				
23									c	24	GFCI CB		2	20				
25	GFCI CB		1	20					a	26								
27	GFCI CB		1	20					b	28	GFCI CB		1	20				
29	GFCI CB		1	20					c	30	GFCI CB		1	20				
31	GFCI CB		1	20					a	32	GFCI CB		1	20				
33	GFCI CB		1	20					b	34	GFCI CB		1	20				
35	GFCI CB		1	20					c	36	GFCI CB		1	20				
37	GFCI CB		2	20					a	38	GFCI CB		1	20				
39									b	40	GFCI CB		1	20				
41	GFCI CB		1	20					c	42	GFCI CB		1	20				
43	GFCI CB		1	20					a	44			1	20				
45	GFCI CB		2	40					b	46			1	20				
47									c	48			1	20				
49	GFCI CB		1	20					a	50			1	20				
51			1	20					b	52			1	20				
53			1	20					c	54			1	20				
55			1	20					a	56								
57			1	20					b	58			3	40				
59			1	20					c	60								
61	SPACE								a	62	SPACE							
63	SPACE								b	64	SPACE							
65	SPACE								c	66	SPACE							

CONNECTED LOAD (KVA) øA ____ øB ____ øC ____

EQUIPMENT SERVED	CONNECTED LOAD	LF	DF	DEMAND LOAD
		TOTAL KVA:		
		AMPS:		

REMARKS:
- PROVIDE TYPE WRITTEN DIRECTORY
- PROVIDE NEUTRAL AND GROUND BARS
- BRANCH CIRCUIT BREAKERS SHALL BE SERIES RATED TO MAIN CIRCUIT BREAKER.
- PROVIDE LOCKABLE HINGED DOOR-IN-DOOR.

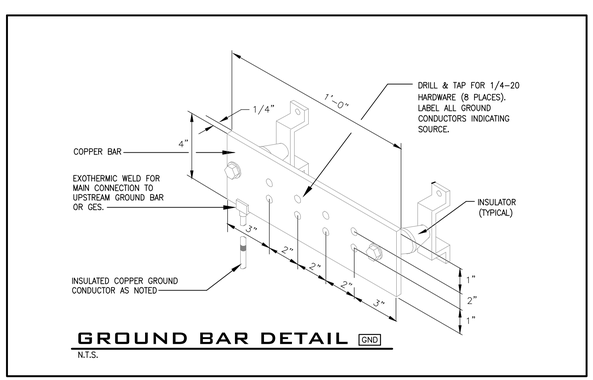

GROUND BAR DETAIL GND

N.T.S.

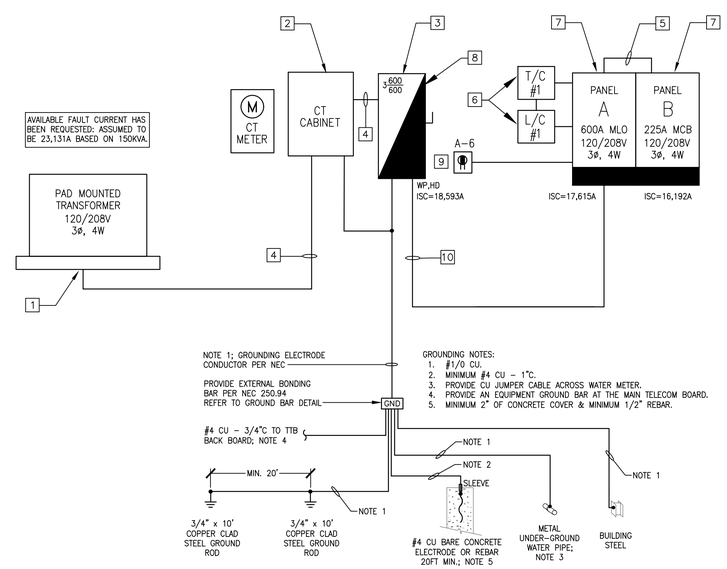

RISER DIAGRAM

NTS

RISER NOTES: □

1. NEW PAD MOUNTED TRANSFORMER. FIELD VERIFY WITH LOCAL ELECTRIC COMPANY FOR ALL REQUIREMENTS PRIOR TO ROUGH-IN.
2. ALL SERVICE EQUIPMENT AND METERING SHALL BE PER THE UTILITY ELECTRIC SERVICE STANDARDS. COORDINATE SPECIFIC REQUIREMENTS WITH THE AREA PLANNER. PROVIDE LABELING PER SERVICE STANDARDS. PROVIDE #1/0 CU BOND TO CT CABINET.
3. PROVIDE SIGNAGE AT THE SERVICE INDICATING THE MAXIMUM AVAILABLE FAULT CURRENT AND THE DATE CALCULATED PER NEC 110.24(A). REFER TO CALCULATED FAULT CURRENTS SHOWN ON RISER DIAGRAM FOR ADDITIONAL INFORMATION.
4. (2) SETS, EACH SET: (4)#350 KCMIL CU. IN 3 1/2" CONDUIT.
5. (4)#4/0 CU, (1)#4 CU. GROUND IN 2 1/2" CONDUIT.
6. PROVIDE TIME CLOCK AND LIGHTING CONTACTOR PER DIAGRAM ON THIS DRAWING.
7. CIRCUIT BREAKER SIZES AND QUANTITIES ARE PRELIMINARY, REFER TO TENANT'S DRAWINGS FOR ACTUAL REQUIREMENTS.
8. BOND SERVICE DISCONNECT SWITCH PER NEC 250.24 WITH A #1/0 CU BONDING JUMPER PER NEC TABLE 250.102(C)(1).
9. PROVIDE A WEATHERPROOF 20A, GFCI RECEPTACLE AT THE SERVICE PER NEC 210.64.
10. (2) SETS, EACH SET: (4)#350 KCMIL CU., (1)#1/0 CU GROUND IN 3 1/2" CONDUIT.

IF THE CONTRACTOR CHOOSES TO USE A SERIES RATED SYSTEM PER 240.86, THE CONTRACTOR SHALL BE RESPONSIBLE FOR ENSURING THAT THE CHOSEN SWITCHGEAR VENDOR SELECTS THE APPROPRIATE UL TESTED SERIES RATED CIRCUIT BREAKERS COMBINATIONS (TIER 2 OR TIER 3) AS NEEDED BASED ON THE AVAILABLE FAULT CURRENT AT THE SERVICE EQUIPMENT. PROVIDE AND INSTALL ALL LABELING PER NEC. 110.24.

INDICATED FAULT CURRENTS ARE BASED ON PRELIMINARY UTILITY TRANSFORMER SIZES AND SHALL BE VERIFIED BASED ON THE EXISTING OR NEW INSTALLED TRANSFORMER. REPORT ANY DISCREPANCIES TO THE ENGINEER.

PER NEC 110.16, PROVIDE ARC-FLASH HAZARD WARNING LABELS FOR ALL ELECTRICAL EQUIPMENT, SUCH AS SWITCHBOARDS, SWITCHGEAR, PANELBOARDS, INDUSTRIAL CONTROL PANELS, METER SOCKET ENCLOSURES, AND MOTOR CONTROL CENTERS, THAT IS IN OTHER THAN DWELLING UNITS, AND IS LIKELY TO REQUIRE EXAMINATION, ADJUSTMENT, SERVICING, OR MAINTENANCE WHILE ENERGIZED, SHALL BE FIELD OR FACTORY MARKED TO WARN QUALIFIED PERSONS OF POTENTIAL ELECTRIC ARC FLASH HAZARDS. THE MARKING SHALL MEET THE REQUIREMENTS IN 110.21(B) AND SHALL BE LOCATED SO AS TO BE CLEARLY VISIBLE TO QUALIFIED PERSONS BEFORE EXAMINATION, ADJUSTMENT, SERVICING, OR MAINTENANCE OF THE EQUIPMENT.

REV#	DATE	REVISION

2651 EAU GALLIE BLVD, SUITE A
MELBOURNE, FL 32935
TEL 321.253.1721
WWW.CEGENGINEERING.COM
C.O.A. #0008097
CONSTRUCTION ENGINEERING GROUP
Consulting Engineers

ELEVEN18 ARCHITECTURE
A WOMEN'S BUSINESS ENTERPRISE
License: AA26001884
424 E. Central Blvd. #542
Orlando, FL 32801
www.eleven18architecture.com
Mark Adams: 407-756-2119
Kim Day: 407-416-9960
Neke White: 407-416-9965

STARBUCKS
TUSKAWILLA
3645 ALOMA AVE, OVIEDO, FL 32765

DRAWING TITLE
RISER DIAGRAM AND SCHEDULES

COPYRIGHT © STATEMENT
THESE DOCUMENTS, THEIR CONTENT AND DESIGN ARE THE PROPERTY OF CONSTRUCTION ENGINEERING GROUP (CEG) AND ARE ISSUED ONLY FOR THE SPECIFIC PROJECT NOTED ON THESE DOCUMENTS. ANY REVISIONS, REPRODUCTIONS OR MODIFICATIONS OF THE DOCUMENTS WITHOUT THE EXPRESS WRITTEN CONSENT OF CEG IS PROHIBITED BY LAW.

ENGINEER OF RECORD

DAVID E. ALLEY, PE
FL PE #55008

DATE	06-23-23
SCALE	AS NOTED
PROJ. NO. :	230069
DESIGNED BY:	DAP
DRAWN BY:	DAP
CHECKED BY:	DEA
DRAWING NO.	E6

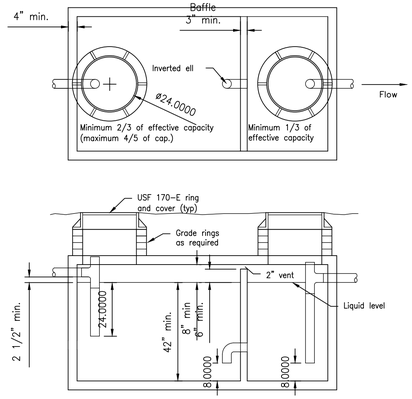

Notes:
1. Minimum tank volume (effective capacity) is 750 gallons. Maximum tank volume is 1250 gallons.
2. Multiple units shall be linked in series.
3. Provide a minimum 8" freeboard above the liquid level.
4. Minimum effective depth of liquid compartments is 42".
5. Minimum pipe size is 4".
6. Use 4000 psi Portland Type II concrete with minimum 3/4 " cover on reinforcing steel.
7. Interceptor tank and manholes subject to traffic shall be designed for AASHTO H-20 loading.
8. Manhole covers shall be stamped "grease".
9 . Provide 2" gap between baffle and tank top.
10. Only kitchen wastewater shall pass through a grease interceptor before discharge to sanitary sewer system.
11. Refer to chapter 64e-6.013(8) of the Florida Administrative Code.

GREASE TRAP WORKSHEET*

2013 FLORIDA ADMINISTRATIVE CODE – RULE 64E-6.013, (7), (d), 1. RESTAURANTS

(S) x (GS) x (HR/12) x (LF) = EFFECTIVE CAPACITY OF GREASE INTERCEPTOR IN GALLONS.

(S) = NUMBER OF SEATS** = 130

(GS) = GALLONS OF WASTEWATER PER SET
(_) USE 25 GALLONS FOR ORDINARY RESTAURANT
(X) USE 10 GALLONS FOR SINGLE SERVICE ARTICLE RESTAURANTS

TOTAL GALLONS PER SEAT = 10

(HR/12) NUMBER OF HOURS ESTABLISHMENT IS OPEN = 14 /12 = 1.17

(LF) = LOADING FACTOR = .75
USE 2.0 INTERSTATE HIGHWAYS
USE 1.5 OTHER FREEWAYS
USE 1.25 RECREATIONAL AREAS
USE 1.0 MAIN HIGHWAYS
USE 0.75 OTHER ROADS

(130) X (10) X (1.17) X (.75) = 1141 EFFECTIVE CAPACITY OF GREASE INTERCEPTOR IN GALLONS.

BUILDING REQUIRES (1) GREASE TRAPS WITH 1,250 GALLON CAPACITY EACH FOR A TOTAL OF 1,250 GALLONS.

* VALUES USED ARE BASED FROM ARCHITECTURAL DRAWINGS AND TENANT REQUEST

** SEATING BASED ON TOTAL SQ. FT. ASSUMED AS DINING AREA; FLORIDA BUILDING CODE, 2020 FOR "ASSEMBLY WITHOUT FIXED SEATS, UN-CONCENTRATED" 3274 SQ. FT. x 0.5 / 15 SQ. FT PER PERSON = 94 SEATS.

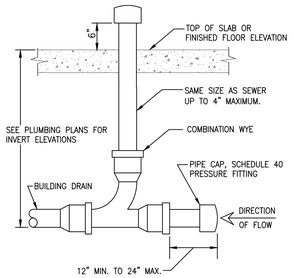

SANITARY STUB DETAIL

NTS

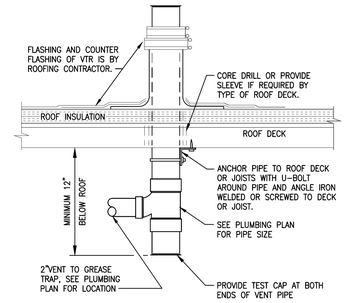

VENT THRU ROOF DETAIL

NTS

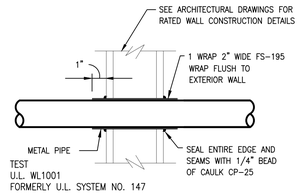

UNINSULATED PIPE/ WALL PENETRATION FIRESTOP DETAIL

NTS

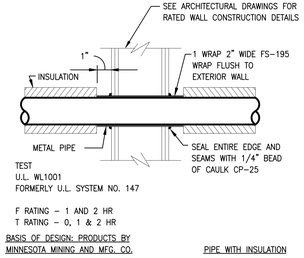

INSULATED PIPE/ WALL PENETRATION FIRESTOP DETAIL

NTS

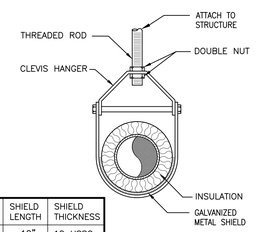

PIPE DIAMETER	SHIELD LENGTH	SHIELD THICKNESS
UP TO 3"	12"	18 USSG
4" AND ABOVE	15"	16 USSG

INSULATED PIPE SUPPORT DETAIL

NTS

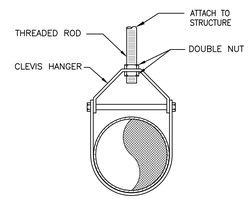

PIPE SUPPORT DETAIL

NTS

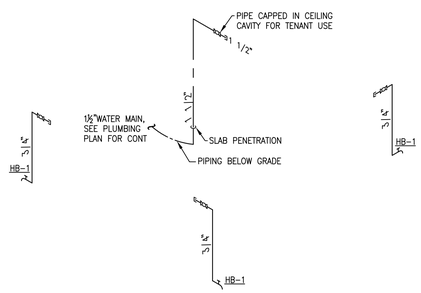

DOMESTIC WATER ISOMETRIC

NTS

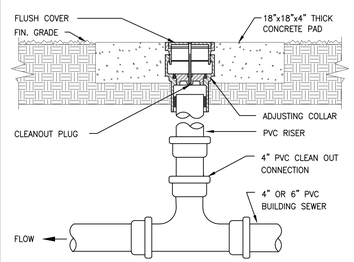

2-WAY EXTERIOR CLEANOUT DETAIL

NTS

PLUMBING GENERAL NOTES AND SPECIFICATIONS

1. PROVIDE ALL LABOR, MATERIALS, EQUIPMENT, AND TOOLS TO PERFORM ALL WORK NECESSARY FOR THE COMPLETE EXECUTION OF THE PLUMBING WORK AS SHOWN ON THE DRAWINGS. PIPING SHALL ESSENTIALLY BE ROUTED AND LOCATED AS INDICATED ON THE DRAWINGS. HOWEVER, ACTUAL PLACEMENT SHALL BE VERIFIED BY CONFIRMING EXACT LOCATION OF STRUCTURES AND OTHER UTILITIES IN THE FIELD AND BY CAREFUL LAYOUT PRIOR TO EXECUTION OF THE WORK. PLUMBING DRAWINGS ARE GENERALLY DIAGRAMMATIC AND SHOULD NOT BE SCALED.
2. PROVIDE WORK NOT SPECIFICALLY SHOWN OR SPECIFIED, YET REQUIRED FOR PROPER AND COMPLETE OPERATIONS OF ALL SYSTEMS AND TO SATISFY THE DESIGN INTENT. COMPLY WITH ALL APPLICABLE CODES AND REGULATIONS.
3. LABOR FOR THE INSTALLATION OF MATERIALS AND EQUIPMENT FURNISHED UNDER THE PLUMBING CONTRACTORS' SCOPE OF WORK SHALL BE PERFORMED BY EXPERIENCED MECHANICS OF THE PROPER TRADE AND ALL WORKMANSHIP SHALL BE FIRST CLASS AND SHALL BE IN COMPLIANCE WITH THE SPECIFIC REQUIREMENTS OF THE CONTRACT DRAWINGS.
4. ALL DISCREPANCIES ON DRAWINGS SHALL BE BROUGHT TO THE ATTENTION OF THE ARCHITECT IN WRITING PRIOR TO SUBMISSION OF BIDS. SUBMISSION OF A BID CONSTITUTES ACCEPTANCE OF FIELD CONDITIONS.
5. SEE ARCHITECTURAL DRAWINGS FOR EXACT PLUMBING FIXTURE LOCATIONS, MOUNTING HEIGHTS, DIMENSIONS AND ADDITIONAL REQUIREMENTS NOT COVERED ON THESE DRAWINGS.
6. ALL WORK SHALL BE IN ACCORDANCE WITH, BUT NOT LIMITED TO, THE LATEST ADOPTED EDITION OF THE FOLLOWING CODES AND STANDARDS:

   FLORIDA BUILDING CODE, (FBC);
   NATIONAL FIRE PROTECTION ASSOCIATION, (NFPA);
   AMERICANS WITH DISABILITIES ACT, (ADA);
   AMERICAN SOCIETY OF MECHANICAL ENGINEERS, (ASME);
   AMERICAN SOCIETY FOR TESTING AND MATERIALS, (ASTM);
   AMERICAN NATIONAL STANDARDS INSTITUTE, (ANSI);
   UNDERWRITERS LABORATORIES, (UL);
   ALL LOCAL CODES, ORDINANCES, REGULATIONS;
   THE AUTHORITY HAVING JURISDICTION.
7. CONTRACTOR SHALL OBTAIN AND FURNISH ALL PERMITS, AND ARRANGE FOR ALL REQUIRED INSPECTIONS.
8. CONTRACTOR SHALL INSPECT THE SITE FOR FIELD VERIFICATION OF ALL ASPECTS OF THE PROJECT PRIOR TO BIDDING.
9. CONTRACTOR SHALL COORDINATE ALL WORK WITH OTHER TRADES.
10. ROUTE ALL PIPING CONCEALED ABOVE CEILINGS, WITHIN WALLS, OR IN CHASES. PIPING EXPOSED SHALL BE SLOPED AND PAINTED TO MATCH ARCHITECTURAL FINISHES. PIPING IN MECHANICAL ROOMS MAY BE EXPOSED.
11. CONTRACTOR SHALL BE RESPONSIBLE FOR MAINTAINING FIRE RATING AND WEATHERPROOFING INTEGRITY OF ALL PIPING AND PENETRATIONS.
12. CONTRACTOR SHALL INSTALL DIELECTRIC UNIONS AT CONNECTIONS OF DISSIMILAR METALS.
13. DO NOT PENETRATE WALL FOOTINGS WITH PIPING. COORDINATE WITH GENERAL CONTRACTOR TO DROP FOOTINGS AS REQUIRED TO CLEAR PLUMBING SERVICES. WHERE ABSOLUTELY NECESSARY, ALL PIPING PENETRATING BEARING WALL OR FOOTING MUST BE SLEEVED AND LOCATION APPROVED BY THE STRUCTURAL ENGINEER.
14. CONTRACTOR SHALL BE RESPONSIBLE FOR PROVIDING ALL NECESSARY SUPPORTING DEVICES FOR ALL FIXTURES INCLUDED IN CONTRACT, OR HEREIN SPECIFIED, OR OTHERWISE.
15. WALL BRACKETS, HANGERS, SUPPORTS, ETC. SHALL BE PROVIDED WHERE REQUIRED IN ACCORDANCE WITH THE BEST STANDARD PRACTICE OF THE TRADE AND AS PER CODE. ADDITIONAL SUPPORTS SHALL BE PROVIDED TO TRANSMIT LOADS TO THE MAIN STRUCTURE WHERE REQUIRED. ALL EXPOSED SUPPORTS SHALL BE HOT DIPPED GALVANIZED OR FIBERGLASS REINFORCED "UNISTRUT" TYPE INCLUDING HARDWARE.

   MAXIMUM HORIZONTAL SPACING:
   CAST IRON 5'-0" ON CENTER (10' PIPE LENGTHS MAY BE 10'-0" SPACING)
   COPPER 6'-0" ON CENTER FOR 1-1/4" AND SMALLER
   10'-0" ON CENTER FOR 1-1/2" AND LARGER
   CPVC 3'-0" ON CENTER FOR 1/2" THRU 1"
   4'-0" ON CENTER FOR 1-1/4" AND LARGER
   PVC 4'-0" ON CENTER
16. STORM DRAIN, CONDENSATE DRAIN, SANITARY WASTE AND VENT PIPING SHALL BE COLLECTED AND TERMINATED AT A POINT SHOWN ON THE DRAWINGS. PIPING SHALL BE SOLID CORE SCHEDULE 40 TYPE DWV PVC WITH SOLVENT WELD JOINTS, EXCEPT FOR RETURN AIR PLENUM AREAS WHERE SERVICE WEIGHT CAST IRON PIPE WITH HUB AND SPIGOT FITTINGS OR PVC PIPING WITH 1" THICK FIRE WRAP INSULATION SEALED TO PROVIDE FS/SD = 25/50 SHALL BE USED. FIRE WRAP INSULATION SHALL BE 5A FIRE BARRIER PLENUM WRAP BY 3M OR APPROVED EQUIVALENT.
17. ALL DRAINAGE PIPING 3" AND LARGER SHALL HAVE A MINIMUM SLOPE OF ¼" PER FOOT, PIPING 2-½" AND SMALLER SHALL HAVE A MINIMUM SLOPE OF ¼" PER FOOT UNLESS OTHERWISE NOTED.
18. VENT PIPING SHOWN ON FLOOR PLANS IS ONLY INDICATIVE EXCEPT FOR VTR LOCATIONS.
19. BUILDING DOMESTIC WATER PIPING (ABOVE FLOOR) SHALL BE TYPE "L" COPPER. PROVIDE TRANSITION FITTINGS AS REQUIRED TO INSTALL VALVES, FIXTURE STOPS, EQUIPMENT AND OTHER COMPONENTS. WATER PIPING IN RETURN AIR PLENUM AREAS SHALL BE TYPE L HARD COPPER TUBE PAINTED TO MATCH. ALL HOT WATER, TEMPERED WATER AND HOT WATER RETURN PIPE AND FITTINGS SHALL BE COVERED IN ¾" THICK ELASTOMERIC INSULATION WITH ALL SEAMS AND JOINTS SEALED TIGHT.
20. ALL MATERIALS PROVIDED BY THE CONTRACTOR SHALL BE NEW AND FREE OF DEFECTS AND SHALL BE UL LISTED FOR THE INTENDED APPLICATION.
21. ALL HAND SINKS AND LAVATORIES SHALL BE PROVIDED WITH TEMPERED WATER AND TEMPERATURE SET TO 110°F MAXIMUM.
22. HOT AND COLD WATER SUPPLY PIPING AND DRAIN PIPING UNDER HANDICAPPED LAVATORIES SHALL BE INSULATED PER AMERICANS WITH DISABILITIES ACT, WITH FACTORY FABRICATED SEAMLESS MICROBIAL PVC RESIN INSULATION.
23. VALVES AND FITTINGS SHALL BE OF SAME SIZE AS LINE IN WHICH THEY ARE INSTALLED.
24. INSTALL WATER HAMMER ARRESTORS AT EACH FIXTURE, OR BATTERY OF FIXTURES WHERE REQUIRED. ARRESTORS SHALL BE FACTORY FABRICATED. INSTALL ARRESTORS AND SIZE PER PLUMBING AND DRAINAGE INSTITUTE STANDARD P.D.I. WH-201. AIR CHAMBERS SHALL NOT BE CONSIDERED AN EQUAL TO WATER HAMMER ARRESTORS AS SPECIFIED.
25. ALL WATER SUPPLY AND DRAINAGE LINES SHALL BE INSTALLED AS CLOSE TO PLANS AS POSSIBLE WITH NO CHANGE IN SIZING.
26. BALL VALVES ¼" THROUGH 2" SHALL BE TWO PIECE – 600 WOG, TEFLON SEATS, ANSI 316 STAINLESS STEEL BALL AND STEM (EXTENSION STEM ON INSULATED HOT WATER AND TEMPERED HOT WATER), BRONZE BODY WITH THREADED OR SOLDER ENDS.

PLUMBING EQUIPMENT SCHEDULE

SYMBOL	DESCRIPTION	EQUIPMENT BASIS OF DESIGN	CONNECTION SIZE	REMARKS
	BALL VALVE	WATTS – FBV-4	EQUAL TO PIPE SIZE	FULL PORT QUARTER TURN
FCO/ECO	FLOOR/EXTERIOR CLEANOUT	WATTS CO-12	EQUAL TO PIPE SIZE UP TO 4"	INSTALL FLUSH WITH FINISHED FLOOR OR GRADE ROUND NICKEL-BRONZE TOP
HB-1	EXTERIOR HOSE BIBB	JR SMITH S-5515	1/2"	MOUNT 30" ABOVE FINISHED GRADE

NOTE: MANUFACTURER AND MODEL NUMBER INTENDED FOR LEVEL OF QUALITY. SUBSTITUTIONS MAY BE SUBMITTED IF QUALITY MEETS THIS LEVEL.

PLUMBING LEGEND

	COLD WATER ABOVE GRADE
	COLD WATER BELOW GRADE
	SANITARY SEWER BELOW GRADE
—CW—	GREASE WASTE BELOW GRADE
	SANITARY VENT
—ST—	STORM WATER BELOW GRADE

ABBREVIATIONS

AAV	AIR ADMITTANCE VALVE	°F	DEGREES FAHRENHEIT
ADA	AMERICANS WITH DISABILITIES ACT	GPM	GALLONS PER MINUTE
CONN	CONNECTION	HR	HOUR
CONT	CONTINUATION	HW	HOT WATER
CW	COLD WATER	NTS	NOT TO SCALE
DWG	DRAWING	SS	SANITARY SEWER
EX–	EXISTING	T&P	TEMPERATURE & PRESSURE
EWH	ELECTRIC WATER HEATER	TYP	TYPICAL
		V	VENT

THIS ITEM HAS BEEN ELECTRONICALLY SIGNED AND SEALED BY KEITH M. PRZECLAWSKI, PE ON THE DATE ADJACENT TO THE SEAL USING A SHA AUTHENTICATION CODE. PRINTED COPIES OF THIS DOCUMENT ARE NOT CONSIDERED SIGNED AND SEALED AND THE SHA AUTHENTICATION CODE MUST BE VERIFIED ON ANY ELECTRONIC COPIES.

REV#	DATE	REVISION COUNTY COMMENTS
1	07/10/2023	

2651 EAU GALLIE BLVD, SUITE A
MELBOURNE, FL 32935
TEL 321.253.1221
WWW.CEGENGINEERING.COM
C.O.A. #0008097
CONSTRUCTION ENGINEERING GROUP
Consulting Engineers

ELEVEN18 ARCHITECTURE
A WOMEN'S BUSINESS ENTERPRISE
License: AA26008184
424 E. Central Blvd. #542
Orlando, FL 32801
www.eleven18architecture.com
Mark Adams: 407-756-2119
Kim Day: 407-416-9960
Neke White: 407-416-9965

STARBUCKS
TUSKAWILLA
3645 ALOMA AVE, OVIEDO, FL 32765

DRAWING TITLE
PLUMBING SPECIFICATIONS, SCHEDULES AND DETAILS

COPYRIGHT © STATEMENT
THESE DOCUMENTS AND THEIR CONTENTS ARE THE PROPERTY OF CONSTRUCTION ENGINEERING GROUP (CEG) AND ARE ISSUED ONLY FOR THE SPECIFIC PROJECT NOTED ON THESE DOCUMENTS. ANY REVISIONS, REPRODUCTIONS OR DISTRIBUTION OF THESE DOCUMENTS IN WHOLE OR IN PART, WITHOUT THE EXPRESS WRITTEN CONSENT OF CEG IS PROHIBITED BY LAW.

ENGINEER OF RECORD

KEITH M. PRZECLAWSKI, PE
FL PE #82393

DATE	06-23-23
SCALE	AS NOTED
PROJ. NO. :	230069
DESIGNED BY:	RPO
DRAWN BY:	RPO
CHECKED BY:	KMP
DRAWING NO.	P1

PLUMBING NOTES:

1. COLD WATER STUB OUT IN CEILING CAVITY ABOVE BOTTOM CHORD OF ROOF TRUSS CAP PIPING AND PROVIDE SHUT-OFF VALVE.
2. 4"SS STUB OUT. SEE STUB OUT DETAIL SHEET P1.
3. 3"VTR WITH STUB OUT. SEE VENT THRU ROOF DETAIL SHEET P1.
4. 4"GW STUB OUT. SEE STUB OUT DETAIL SHEET P1.

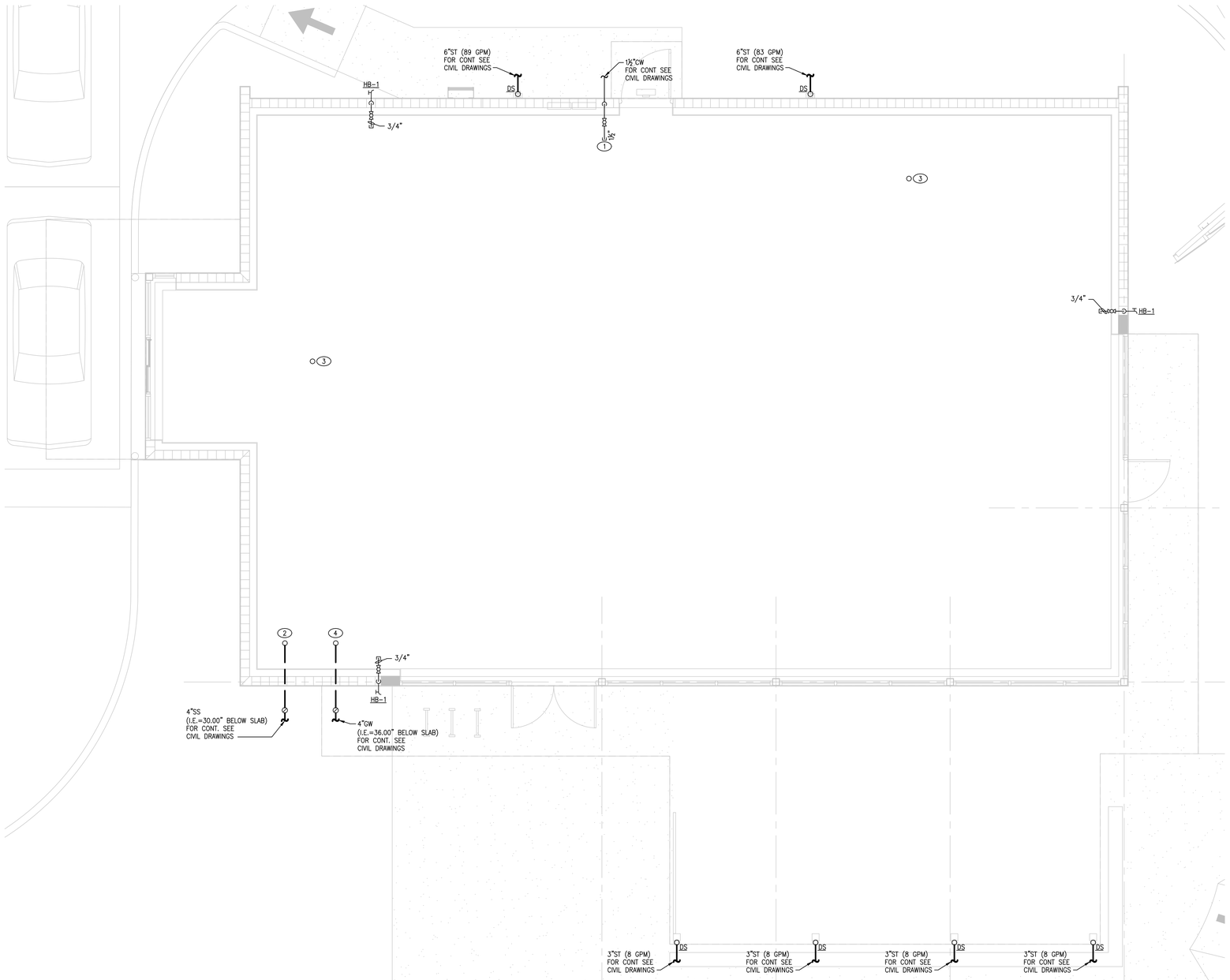

PLUMBING PLAN

SCALE: 1/4" = 1'-0"

0 2' 4' 8' 12'

SCALE 1/4" = 1'-0"

THIS ITEM HAS BEEN ELECTRONICALLY SIGNED AND SEALED BY KEITH M. PRZECLAWSKI, PE ON THE DATE ADJACENT TO THE SEAL USING A SHA AUTHENTICATION CODE. PRINTED COPIES OF THIS DOCUMENT ARE NOT CONSIDERED SIGNED AND SEALED AND THE SHA AUTHENTICATION CODE MUST BE VERIFIED ON ANY ELECTRONIC COPIES.

REV#	DATE	REVISION

CONSTRUCTION ENGINEERING GROUP
Consulting Engineers
2651 EAU GALLIE BLVD, SUITE A
MELBOURNE, FL 32935
TEL. 321.253.1221
WWW.CEGENGINEERING.COM
C.O.A. #0008097

ELEVEN 18 ARCHITECTURE
A WOMEN'S BUSINESS ENTERPRISE
License: AA26001884
424 E. Central Blvd. #542
Orlando, FL 32801
www.eleven18architecture.com
Mark Adams: 407-756-2119
Kim Day: 407-416-9960
Neke White: 407-416-9965

STARBUCKS
TUSKAWILLA
3645 ALOMA AVE, OVIEDO, FL 32765

DRAWING TITLE
PLUMBING PLAN

COPYRIGHT © STATEMENT
THESE DOCUMENTS AND THEIR CONTENTS ARE THE PROPERTY OF CONSTRUCTION ENGINEERING GROUP (CEG) AND ARE ISSUED ONLY FOR THE SPECIFIC PROJECT NOTED ON THESE DOCUMENTS. ANY REVISIONS, REPRODUCTIONS OR MODIFICATIONS OF THESE DOCUMENTS WITHOUT THE EXPRESS WRITTEN CONSENT OF CEG IS PROHIBITED BY LAW.

ENGINEER OF RECORD

KEITH M. PRZECLAWSKI, PE
FL PE #82393

DATE: 06-23-23

SCALE: AS NOTED

PROJ. NO. : 230069

DESIGNED BY: RPO

DRAWN BY: RPO

CHECKED BY: KMP

DRAWING NO. P2